★、可依要求生產不同刃部材料類型（陶瓷類、鎢鋼類、高品級不銹鋼類、鈦及鈦合金類、一般不銹鋼.....等系列）

★、We can produce cutting edges from various types of material as per the requirement, like ceramic, carbide, stainless HSS, titanium and titanium alloy, stainless steel, etc.



超高防銹&超高耐磨不銹鋼&超鋒利刃口&超高精密度内外配合（ASTM440PH/ASTMF899)
Ultra-high anti-rust & ultra-high wear-resistant stainless steel & ultra-sharp edge & ultra-high precision internal and external matching (ASTM440PH/ASTMF899)



陶瓷
Ceramic



鎢鋼
carbide

※ 刃部加工等級：(内外配合間隙0.010~0.015mm)

AAA級: CNC超硬砂輪,鏡面研磨任意形狀之刃口,同心度◎,跳動↗,圓柱度⌭ ≤0.008mm(8μm),可任意的刃口鋒利程度。

A A級： CNC超硬砂輪,精研磨任意形狀之刃口,同心度◎,跳動↗,圓柱度⌭ ≤0.012mm(12μm),可任意的刃口鋒利程度。(常規常備）

A級 ： CNC超硬砂輪,一般研磨任意形狀之刃口,同心度◎,跳動↗,圓柱度⌭ ≤0.018mm(18μm),可任意的刃口鋒利程度。(常規常備）

B級 ： Sodick + GF+慢走絲及電火花EDM加工任意形狀之刃口,同心度◎,跳動↗,圓柱度⌭ ≤0.05~0.100mm(50μm~100μm),可任意的刃口鋒利程度。

C級 ： 慢走絲一般加工之平刃齒一般刃口（傳統型）,同心度◎,跳動↗,圓柱度⌭ ≤0.05~0.100mm (50μm~100μm)可任意的刃口鋒利程度。

※ Cutting edge machining grades: (Internal and external fit clearance 0.010~0.015mm)

class AAA: CNC super hard grinding wheel, mirror surface grinding for any shape of cutting edge.Concentricity◎, run out↗, cylindricity⌭ ≤0.003mm(3μm), any sharpness of cutting edge.

Class A A: CNC super hard grinding wheel, finish grinding for any shape of cutting edge.Concentricity◎, run out↗, cylindricity⌭ ≤0.008mm(8μm),any sharpness of cutting edge. (regular stock)

Class A ： CNC super hard grinding wheel, general grinding for any shape of cutting edge.Concentricity◎, run out↗, cylindricity⌭ ≤0.012mm(12μm), any sharpness of cutting edge. (regular stock)

Class B ： Take the Sodick + GF+WEDM-LS and EDM techinque to process cutting edge of any shapes, Concentricity◎, runout↗, cylindricity⌭ ≤0.05~0.100 mm (50μm~100μm),any sharpness of cutting edges.

Class C ： Take the WEDM-LS technique to generally process common cutting edges with flat flute(traditional type) Concentricity◎, runout↗, cylindricity⌭ ≤0.05~0.100mm (50μm~100μm) any sharpness of cutting edges.

※ 刃部材料類型：

1.超高防銹高耐磨高抗衝擊高韌性不銹鋼（AA）（HRC54° ±2° 斷面）(常規常備)
2.常規標準防銹超高耐磨不銹鋼（A）（HRC64±° 2° 斷面）
3.對焊硬質合金（鎢鋼）類（HRA87° ~94° ）系列(可定制)

Cutting edge Material Types:

1.ultra-high anti-rust high wear-resistant stainless steel（AA）（HRC54° ±2° Section）(regular stock)
2.general anti-rust ultra-high wear-resistant stainless steel（A）（HRC64±° 2° Section）
3.butt welding hard alloy（carbide）（HRA87° ~94° ）series(customizable)

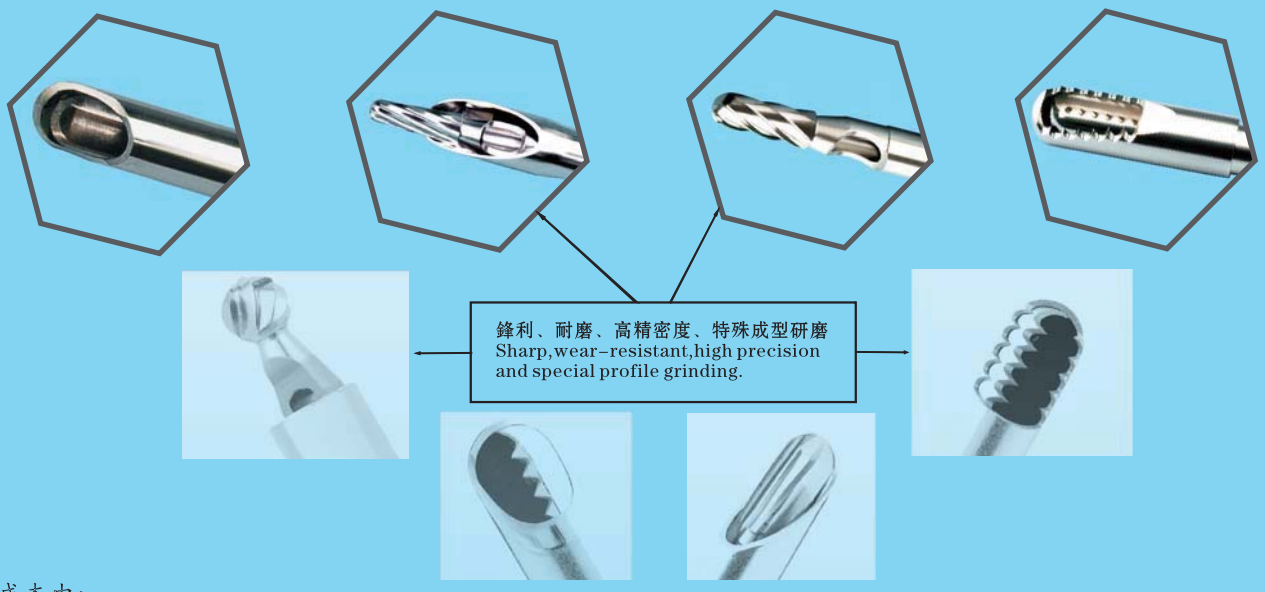

※ 产品成本由：

刃部材料类型+刃部加工等级+产品精度要求＝组成不同使用用途、效果、档次、性价比之制成品

The cost of products incledes:cutting edge material grade + cutting edge process grade + product precision requirements= combine final products with different application,effect,grade and cost-performance.

※ 可热处理后硬料、超硬、超精研磨任意的柄部类型，孔径、壁厚、牙型、牙数、刃口形状、刃口类别，刃口之结构、角度、螺旋角，刃口锋利程度之要求.....

By way of super hard and super finish grinding for harden material after heat treatment, we can produce any type of shank and satisfy your requirement of any hole diameter, wall thickness, thread form, number of teeth, cutting edge shape, cutting edge type, structure of cutting edge, angle, helix angle. and cutting edge sharpness

※ 刃部加工等级：

AAA级: CNC超硬砂轮,镜面研磨任意形状之刃口
A A级: CNC超硬砂轮,精研磨任意形状之刃口(常規常備)
A级 : CNC超硬砂轮,一般研磨任意形状之刃口(常規常備)
B级 : Sodick + GF+慢走丝及电火花EDM加工任意形状之刃口。

※ Cutting edge machining grades:

AAA class: CNC super hard grinding wheel, mirror surface grinding for any shape of cutting edge.
A A class: CNC super hard grinding wheel, finish grinding for any shape of cutting edge.(regular stock)
A class : CNC super hard grinding wheel, general grinding for any shape of cutting edge.(regular stock)
B class : Sodick+ GF+ WEDM-LS and electric spark EDM, machine any shape of cutting edge.



★、可来图来样任意订做陶瓷、钨钢、不锈钢、钛合金、钛等系列,高精密组合家具、钎焊工夹具、耐磨零附件、高精密配件(3DX技术)成型超硬、超精研磨. We can customize for you according to your samples or drawings for any manufacturing of ceramic, carbide, stainless high-speed steel, stainless steel, titanium alloy, titanium diamond etc series , high precision combination profile fixtures, brazed jigs and fixtures, wear-resistant parts, high-precision parts (3DX technology) profile super-hard and super-fine grinding.

可研磨多種的刃口方式/方向角度
We can grind many types of cutting edge and angle direction.



内外刀配合
Cooperation of inner blade and outer blade



采用六軸聯動CNC磨削中心,可依要求研磨任意形狀,鋒利要求,容屑槽深淺要求,刃數,齒型,螺紋角度……

We use CNC with 6-axis and grind any shape,sharpness, the depth of chip pocket,flute number,angel of thread according to your requirement.



外刀：環周外徑外側采用CNC超硬砂輪20° -70° 角度（依鋒利要求）之超硬精研磨（刃口處于内徑内側處）.
Outer blade: Super hard and finish grinding for the circumferential outside of outer diameter for 20° -70° angle (according to the requirement of shanrpness) with CNC super hard grinding wheel.(the cutting edge is on the inner side of inner diameter)。

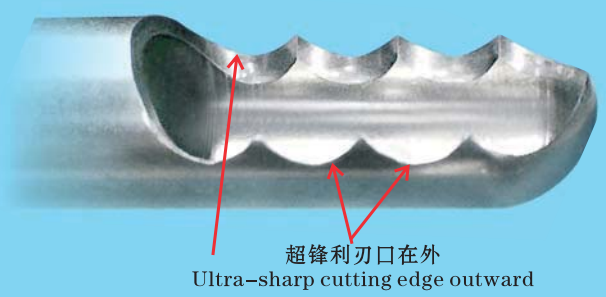

内刀：環周内徑内側采用CNC超硬砂輪10° -60° （依鋒利要求）之超硬精研磨（刃口處于外徑外側處）
Inner blade: Super hard and finish grinding for the circumferential inner side of inner diameter for 10° -60° angle (according to the requirement of sharpness)with CNC super hard grinding wheel (the cutting edge is on the outside of outer diameter).

外刀頭部放大示意圖解（可以研磨任意刃型、鋒利刃之角度、牙型、中心高等尺寸公差要求）。
The schematic diagram of enlarged view for the head of outer blade (We can grind any type of cutting edge,angle of sharp cutting edge,tooth type ,center height etc. dimensional tolerance requirement.)

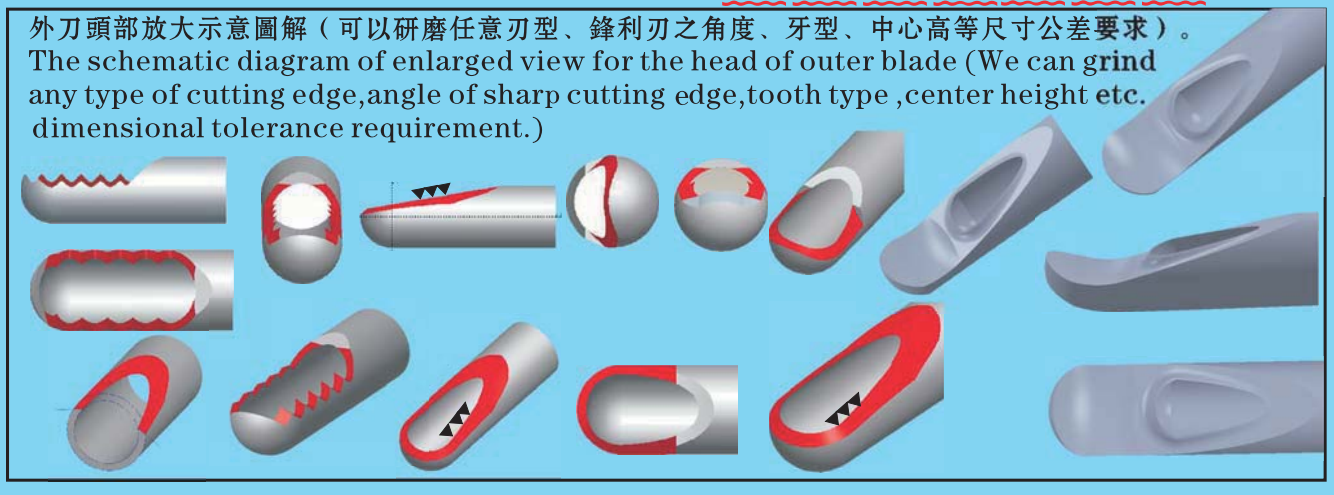



超高防銹高耐磨高抗衝擊高韌性不銹鋼（AA）（HRC54° ±2° 斷面），内外刃口鋒利性保持時間超長,（耐磨耗性能）使用壽命是傳統的AISI304L不銹鋼産品的60～100倍以上，并可使刃口長時間保持超鋒利狀態。

Ultra-high rust-proof, high wear-resistant, high-impact & high-toughness stainless steel (AA) (HRC54° ±2° section), The inner blade and outer blade sharpness retention time is super-long. And lifetime (wear resistance) is 60～100 times higher than that of the traditional AISI304L product, which can make the cutting edge stay super sharp for a long time.

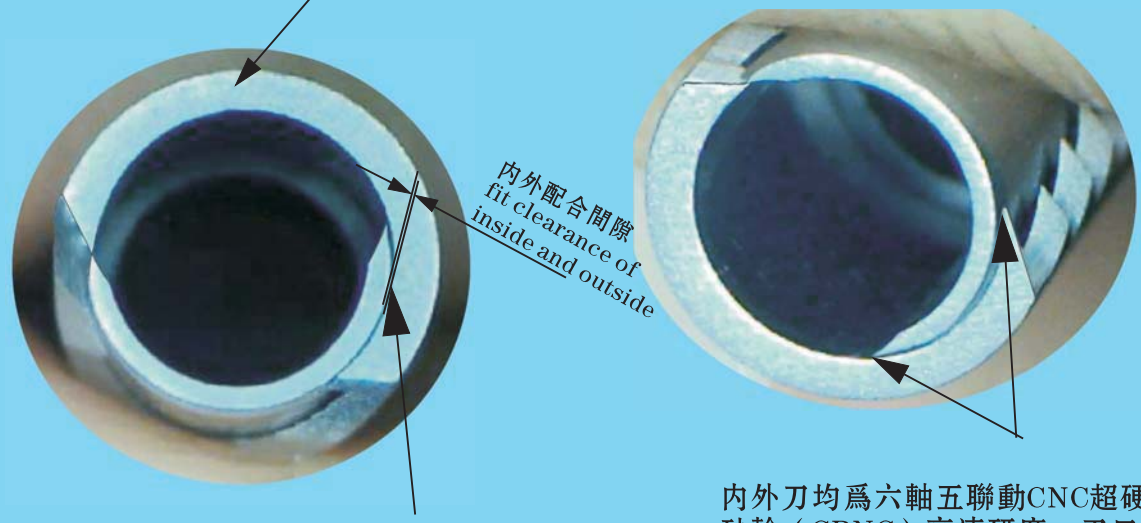

内外刃均爲CNC高精密磨床反復精研磨加工,所以頭部的内外配合間隙爲0.010~0.015mm之間的精密型，手術中切割無毛刺、毛邊、毛點殘留，屬高端精密型。

The inner blade and outer blade are finish-grinded repeatedly by CNC high precision grinding machine, so the head internal and external cooperation clearance is between 0.010~0.015mm, which is the precision type. The cutting is free of burrs and wool residue. It is a high-end precision type.

内外刃均爲六軸五聯動CNC超硬砂輪（CBNC）高速研磨，刃口可近于鏡面光潔度，刃口超鋒利（後角可在20° ～70° 系列），手術中切割超幹净，優良。

The inner blade and outer blade are grinded with high speed by 6-axis 5-linkage CNC superhard grinding wheel (CBNC). The edge can be close to the mirror finish, super-sharp (relief angle can be 20° ～70° series), super clean and excellent cutting during surgery.

以上爲超鋒利刃&超高防銹(AA)&超高耐磨高抗衝擊高韌性&超高精密度内外配合之刨削工具.的(實物實剖範例)

Above are shaver blades with super-sharp edge & ultra-high anti-rust (AA) & ultra-high wear resistance & high impact & high toughness & ultra-high precision internal and external matching. (physical prototype example)

以下爲市場上傳統結構的刨刀的(實物實剖範例)
(傳統常規的AISI304L不銹鋼,無硬度)

The following is traditional-structure shaver blades in current market (physical prototype example)
(Traditional & conventional AISI 304L stainless steel, no hardness)

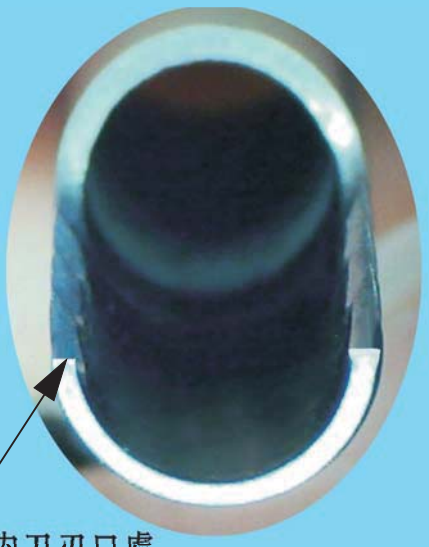

箭頭爲内刀刃口處
(内刀刃在外,且爲負刃口後角,超鈍,切割易發熱及卷邊現象)

(Inner blade edge on the outside is negative edge relief angle, super blunt, easy to heat while cutting, and edge curl appears.)
The arrow indicate inner blade edge

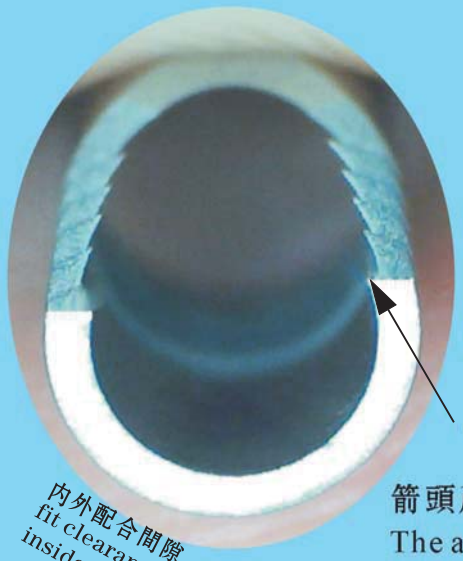

0° 無刃口後角
0° without cutting edge relief angle

箭頭爲外刀刃口處
The arrow indicate outer blade edge

内外配合間隙
fit clearance of inside and outside



傳統結構由模具直接完成，内外刀間隙祇能在0.075～0.110mm之間，因爲模具加工，無法達到更高的精度，造成的内外刀間隙大，切割易卷入組織,及手術中毛點殘留的現象。

The traditional structure is directly completed by the mold. The clearance of the inner and outer blade can only be between 0.075～0.110. Because the mold processing can't achieve higher accuracy, resulting in large gap between the inner and outer blade, with possibility of drawing tissue while cutting, with residue in surgery.

傳統結構的爲綫割加工，（綫割屬高温碳化的原理作業）表面粗糙，放大50倍微鋸齒嚴重，刃口鋒利性很差，切割易發熱，易拉拔組織及拉絲現象。（但成本低很多）

The traditional structure is processed by wire-cut, (wire cutting is the principle operation of high-temperature carbonation) , with rough surface. If magnified 50x, there will be serious micro serrations. It's with poor edge sharpness, easy to heat while cutting, tend to draw tissue with fracture. (but very lower cost)

產品:
各種齒形的關節鏡刨刀，如：削減切骨插刀，延長削減切骨插刀，原始骨插刀，帶寬窗口切骨插刀，直角外層套管電解法抛光切削刃，骨切刀,切削毛刺刀片，門齒狀精鋭刀片，合力切削利口，小窗口滿圓弧切除器，彎月面刨刀，進取型彎月面刨刀，進取型彎月面加齒刨刀，雙彎月面刨刀，進取型彎月邊刨刀，修整器，鋒利進取型一端開口刨刀，刮刀，刨刀，多用型手用外科顯微器械刨刀，多用型刨刀，髖關節鏡刨刀，電鍍切除刀片……刃口精研磨，超鋒利，能輕快、有效、精確去除毛刺骨、切割軟組織，排屑順暢，減少堵塞，節約手術時間

Products:
Various tooth-shaped arthroscopic shaver blades, such as: Bone Plug Cutter With Cutback, Bone Plug Cutter With Extended Cutback, Original Bone Plug Cutter, Bone Plug Cutter With Wide Window, Angled Outer Sleeve, Electropolished cutting edge., Bone Cutter Blade, shaver blades and burrs, Incisor Plus Elite Blades, HELICUT Burr, Full Radius Resector Small Window, Meniscus Cutter, Aggressive Meniscus Cutter, Aggressive Meniscus Cutter Plus, Double Meniscus Cutter, Aggressive Meniscus Side Cutter, Trimmer, Aggressive Open End Cutter, Shaverblade, Shaver blade for multiple use, Shaverblades for multiple use, Hip Arthroscopic Shaver blade, Electroblade Resector...The fine grinding super-sharp cutting edge can remove burrs and cut soft tissue lightly, effectively and accurately, also evacuate the delivery site smoothly to reduce clogging, as a result, save valuable OR time.

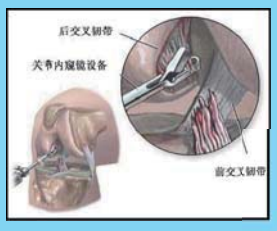



批量時，有必要可協助開模具及批量完成注塑部分，或批量完成機加工柄部的部分.

In batch order, if necessary, we can help customers open mould and finish the injection molding part or finish the machining shank part in batches

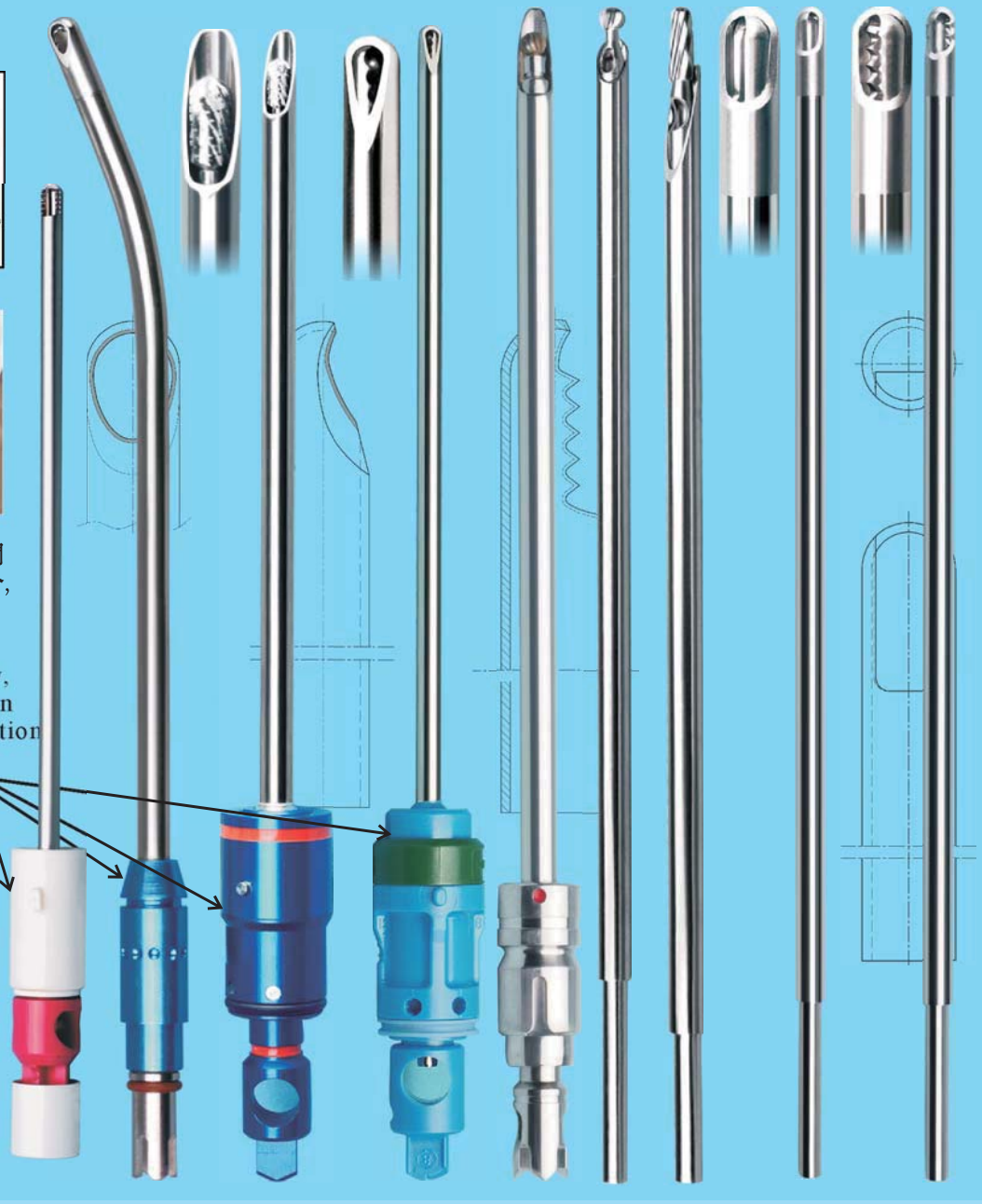

（超鋒利刃口&超高防銹（AA)&超高耐磨&超高精密度內外配合）
(Ultra-sharp cutting edge & ultra-high anti-rust (AA) & ultra-high wear -resistant & ultra-high precision cooperation of inner tubes and outer tubes)
(超鋭利刃先&超防錆(AA)&超耐磨耗&超精度内外接合)



可研磨多種的刃口方式/方向角度
We can grind many types of cutting edge and angle direction.

可研磨多種的刃口方式/方向角度
We can grind many types of cutting edge and angle direction.



批量時，有必要
可協助開模具及
批量完成注塑部分,
或批量完成機加工
柄部的部分.

In batch order,
it's necessary to
open mould, and
needs to finish
injection part or
machining
shank part
in batches.

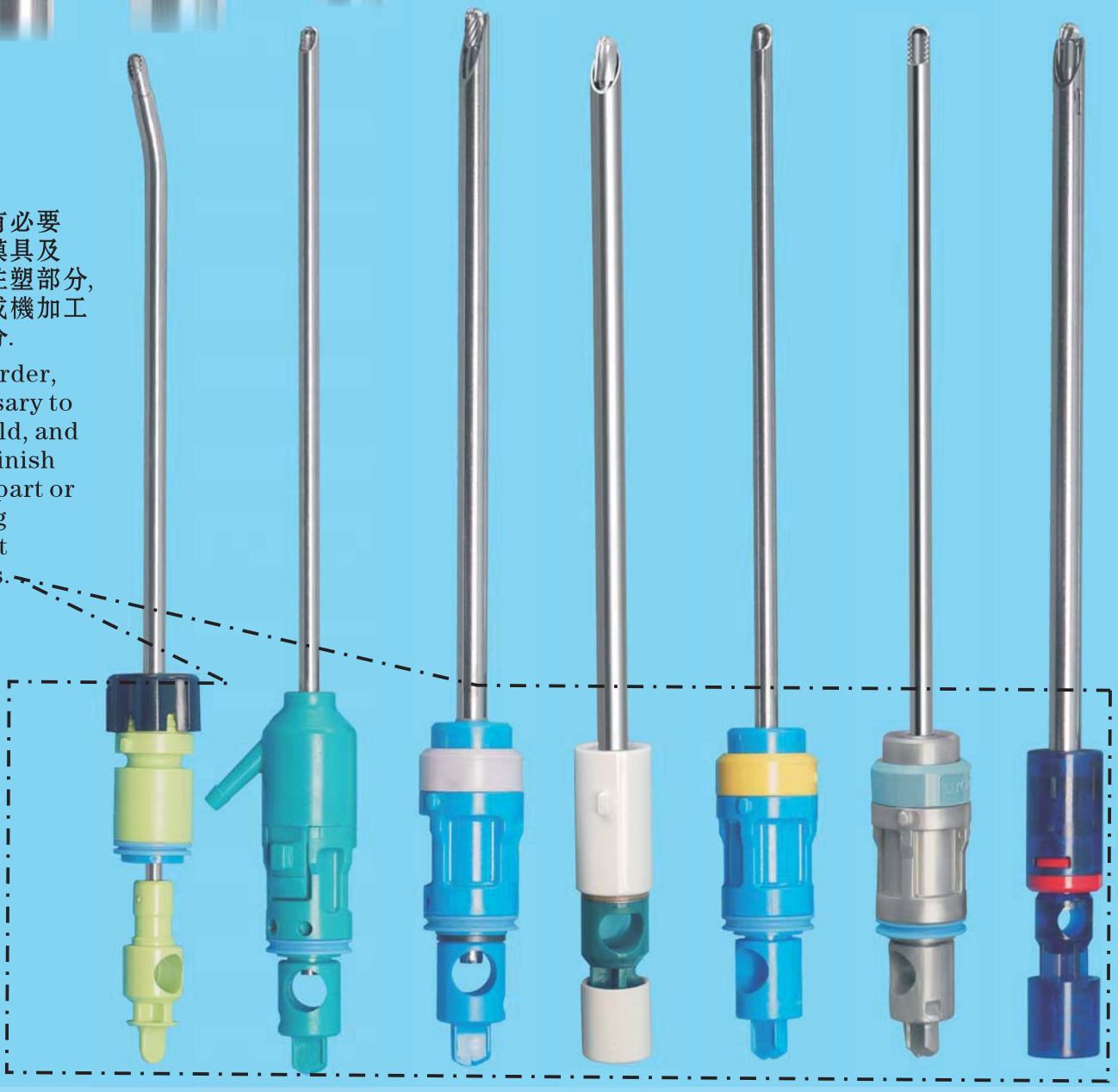

可研磨多種的刃口方式/方向角度
We can grind many types of cutting edge and angle direction.



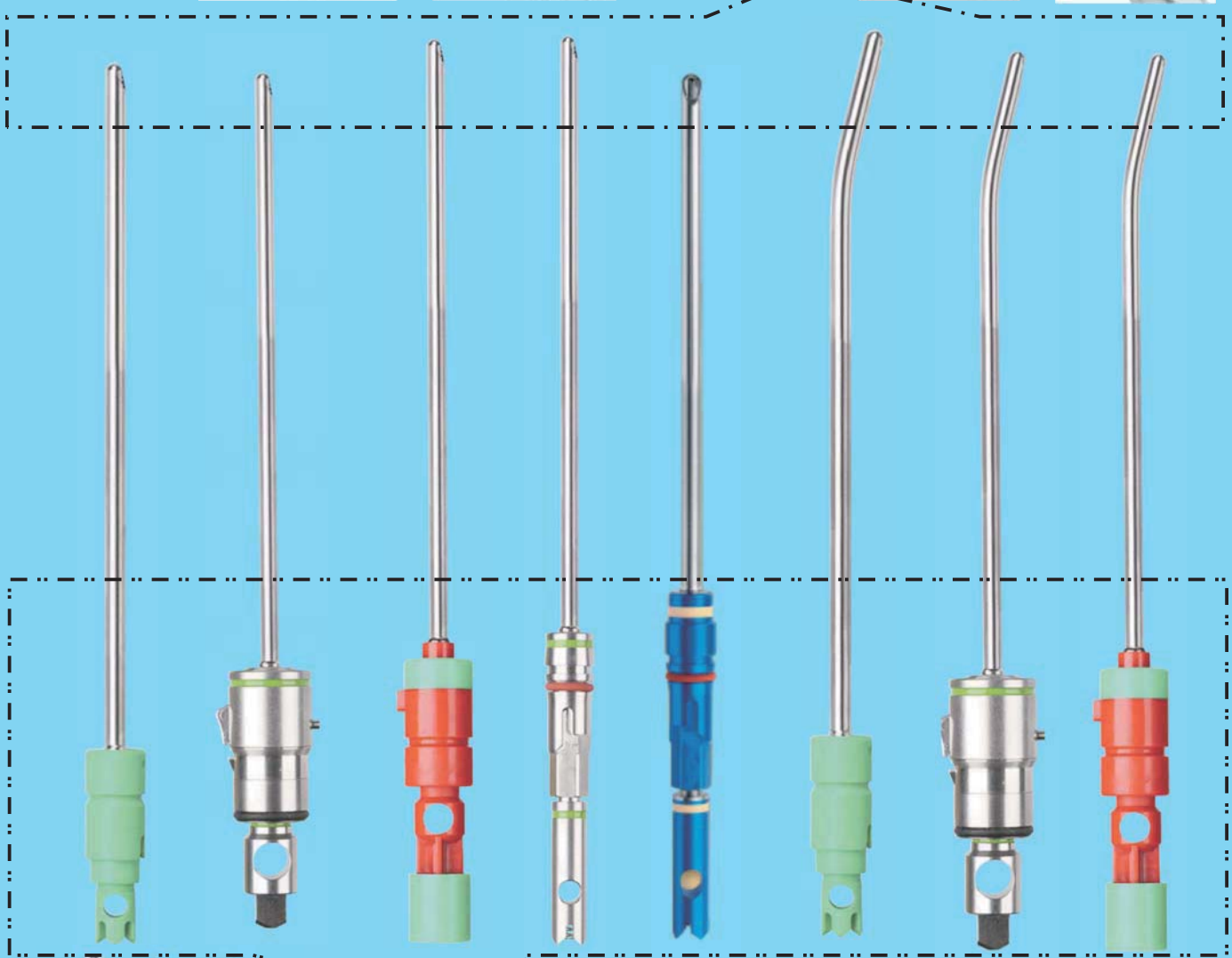



批量時，有必要可協助開模具及批量完成注塑部分,或批量完成機加工柄部的部分.
In batch order, it's necessary to open mould, and needs to finish injection part or machining shank part in batches.



可研磨多種的刃口方式/方向角度
We can grind many types of cutting edge and angle direction.



批量時，有必要可協助開模具及批量完成注塑部分，或批量完成機加工柄部的部分.

In batch order, it's necessary to open mould, and needs to finish injection part or machining shank part in batches.

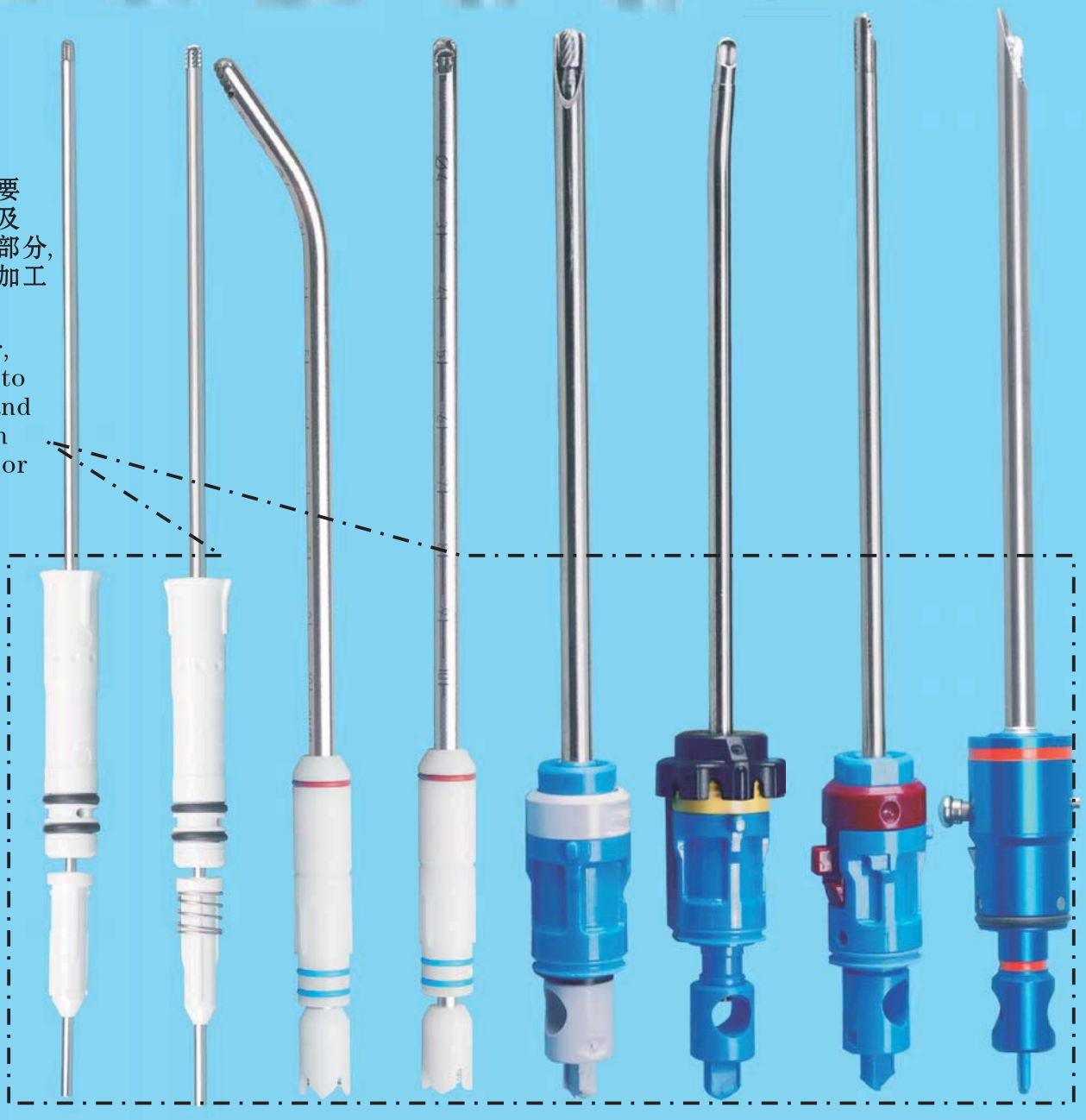

可研磨多種的刃口方式/方向角度
We can grind many types of cutting edge and angle direction.







可研磨多種的刃口方式/方向角度
We can grind many types of cutting edge and angle direction.







可研磨多種的刃口方式/方向角度
We can grind many types of cutting edge and angle direction.



可研磨多種的刃口方式/方向角度
We can grind many types of cutting edge and angle direction.



常规交货状态，供注塑用
Regular delivery status,for injection molding

可研磨多種的刃口方式/方向角度
We can grind many types of cutting edge and angle direction.



高抗衝擊高韌性鎢鋼、超高防銹高硬度不銹鋼、超鋒利刃、鏡面研磨

High-impact high-toughness tungsten steel, ultra-high anti-rust high-hardness stainless steel, ultra sharp edge, mirror grinding

可以任意齒型，牙型的熱處理後高硬度CBNC精磨削加工。

We can undertake high-hardness CBNC precision grinding for any teeth shape and form of thread after heat-treatment.

可研磨多種的刃口方式/方向角度
We can grind many types of cutting edge and angle direction.












任意形狀、齒型、結構、硬度加工
同心度⊙≤0.008mm
圓周振動公差□≤0.010mm
真直度公差－≤0.005mm
真圓度公差○≤0.003mm

Any shape, tooth type, structure, hardness processing
Concentricity ⊙≤0.008mm
Circular runout□≤0.010mm
Straightness －≤0.005mm
Roundness○≤0.003mm








醫用工具及配件系列（耳鼻、内窺鏡、關節鏡刨刀）

Medical tools and parts series(Otorhinolaryngologic, endoscopic, arthroscopic shaver blades)

医療器具及び部品シリーズ(耳鼻、内視鏡、関節鏡鉋刃）

（超鋒利刃口&超高防銹（AA)&超高耐磨&超高精密度内外配合）

(Ultra-sharp cutting edge & ultra-high anti-rust (AA) & ultra-high wear -resistant & ultra-high precision cooperation of inner tubes and outer tubes)

(超鋭利刃先&超防錆(AA)&超耐磨耗&超精度内外接合)

材料：高硬度高抗衝擊高韌性超級鏡面不銹鋼ASTMF899(HRC54° ~64° 系列等級

Material: super mirror stainless steel ASTMF899 with high hardness, high impact and high toughness (HRC54° ~64° series)

材質：高硬度スーパーミラーステンレスASTMF899（HRC54° ～64° シリーズレベル）

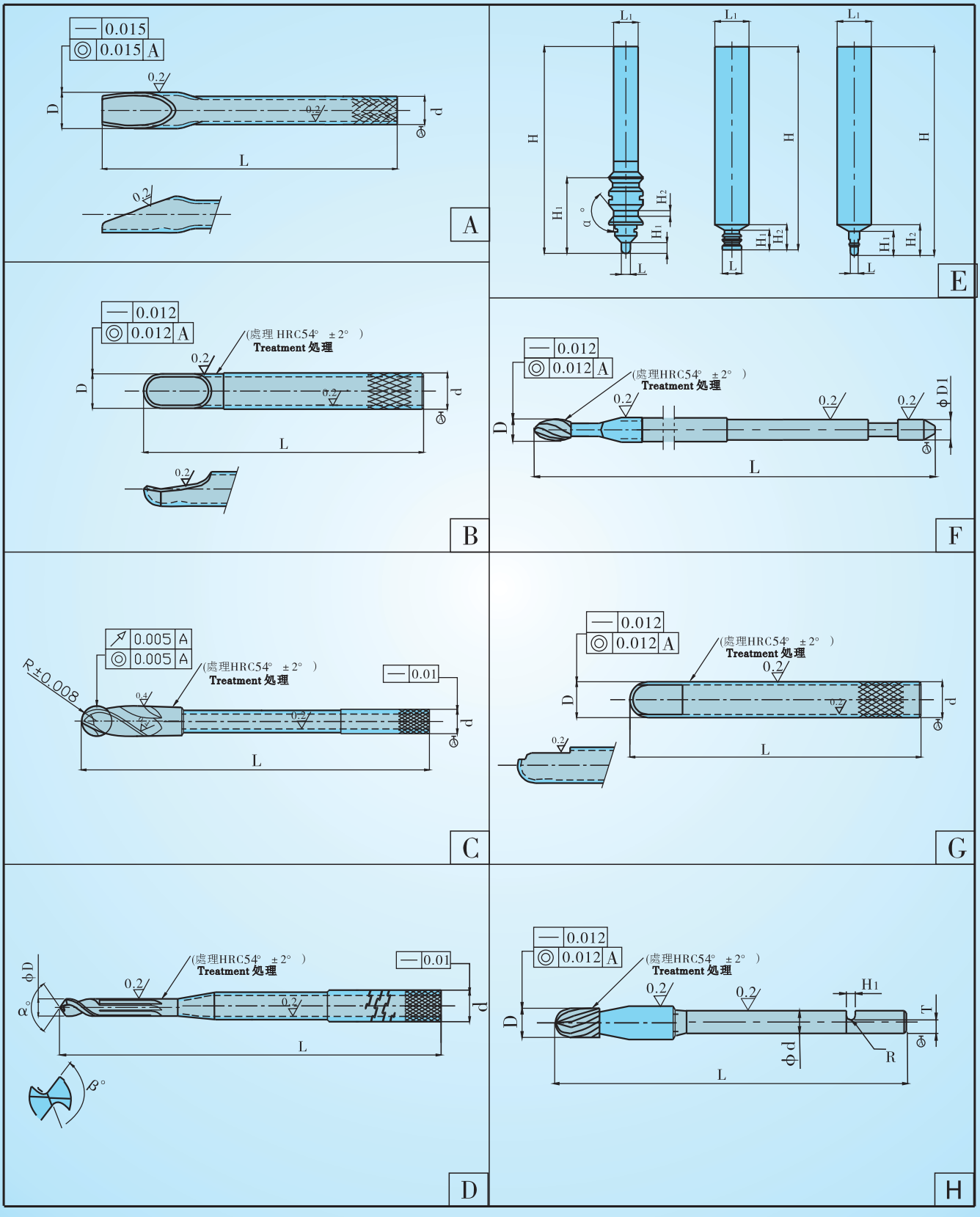

★.依圖依樣尺寸/公差/要求復合成型加工，可生產極為復雜、精密的柄部形狀。Compound contour machining according to the sizes/ tolerances/requirements of drawings and samples, we can produce extreme complex and accurate holder profile.

図面、サンプル、寸法または公差の要求により複合成型加工を行い、極めて複雑、精密な柄部の形状を生産できる.

尾部高强度尾管（常规常备）系列供参考、選配用（長度不限）

High-strength-tail tailpipe (regular stock) series for reference, for matching use (any length)

（單位Unit：mm）

系列规格 Series specifications	管外徑 X 管内孔（±0.035mm） Tube OD X Tube inner hole（±0.035mm） （管外徑可研磨至任意尺寸公差之系列规格） (The OD can be ground to specifications with any tolerance)	系列规格 Series specifications	管外徑 X 管内孔（±0.035mm） Tube OD X Tube inner hole（±0.035mm） （管外徑可研磨至任意尺寸公差之系列规格） (The OD can be ground to specifications with any tolerance)
1	(Φ1.50~Φ1.62)系列 Series X Φ1.025	18	(Φ4.30~Φ4.42)系列 Series X Φ3.405
2	(Φ2.05~Φ2.17)系列 Series X Φ1.705	19	(Φ4.50~Φ4.62)系列 Series X Φ3.625
3	(Φ2.25~Φ2.37)系列 Series X Φ1.675	20	(Φ4.50~Φ4.62)系列 Series X Φ3.925
4	(Φ2.40~Φ2.52)系列 Series X Φ1.725	21	(Φ4.50~Φ4.62)系列 Series X Φ3.825
5	(Φ2.55~Φ2.67)系列 Series X Φ2.025	22	(Φ4.60~Φ4.72)系列 Series X Φ3.625
6	(Φ2.85~Φ2.97)系列 Series X Φ2.225	23	(Φ4.60~Φ4.72)系列 Series X Φ3.775
7	(Φ2.95~Φ3.07)系列 Series X Φ2.405	24	(Φ4.70~Φ4.82)系列 Series X Φ3.525
8	(Φ2.95~Φ3.07)系列 Series X Φ2.225	25	(Φ4.73~Φ4.85)系列 Series X Φ3.975
9	(Φ3.15~Φ3.27)系列 Series X Φ2.475	26	(Φ4.90~Φ5.02)系列 Series X Φ4.275
10	(Φ3.35~Φ3.47)系列 Series X Φ2.725	27	(Φ5.00~Φ5.12)系列 Series X Φ4.405
11	(Φ3.50~Φ3.62)系列 Series X Φ2.525	28	(Φ5.10~Φ5.22)系列 Series X Φ4.275
12	(Φ3.60~Φ3.72)系列 Series X Φ3.055	29	(Φ5.50~Φ5.62)系列 Series X Φ4.855
13	(Φ3.70~Φ3.82)系列 Series X Φ3.025	30	(Φ5.60~Φ5.72)系列 Series X Φ4.725
14	(Φ3.80~Φ3.92)系列 Series X Φ3.255	31	(Φ5.60~Φ5.72)系列 Series X Φ5.105
15	(Φ4.05~Φ4.17)系列 Series X Φ3.505	32	(Φ5.80~Φ5.92)系列 Series X Φ4.925
16	(Φ4.20~Φ4.32)系列 Series X Φ3.325	33	(Φ5.90~Φ6.02)系列 Series X Φ4.925
17	(Φ4.30~Φ4.42)系列 Series X Φ3.575	34	(Φ5.90~Φ6.02)系列 Series X Φ5.225

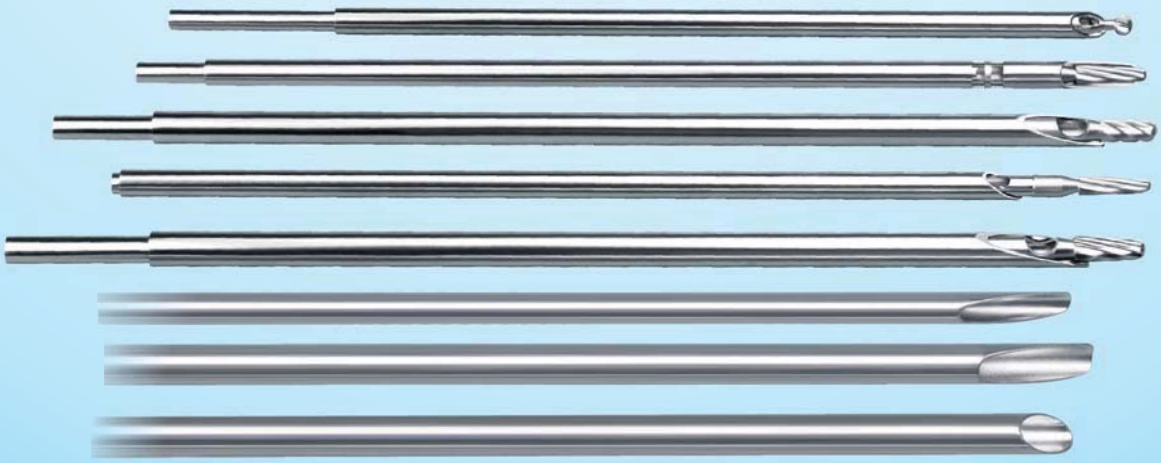

醫用工具及配件系列(耳鼻、内窺鏡、關節鏡刨刀)(超長型設計)
Medical tools and parts series (Otorhinolaryngologic, endoscopic, arthroscopic shaver blades) (Super-long design)
医療器具及び部品シリーズ(耳鼻、内視鏡、関節鏡鉋刃)

(超鋒利刃口&超高防銹(AA)&超高耐磨&超高精密度内外配合)
(Ultra-sharp cutting edge & ultra-high anti-rust (AA) & ultra-high wear-resistant & ultra-high precision cooperation of inner tubes and outer tubes)
(超鋭利刃先&超防錆(AA)&超耐磨耗&超精度内外接合)

頭部段内外超高精密配合,間隙0.010~0.015mm内,
以保證高精密度之切割功能

The inside and outside of head parts are with ultra-high precision matching, and the clearance is within 0.010 ~ 0.015mm, to ensure high-precision cutting function.

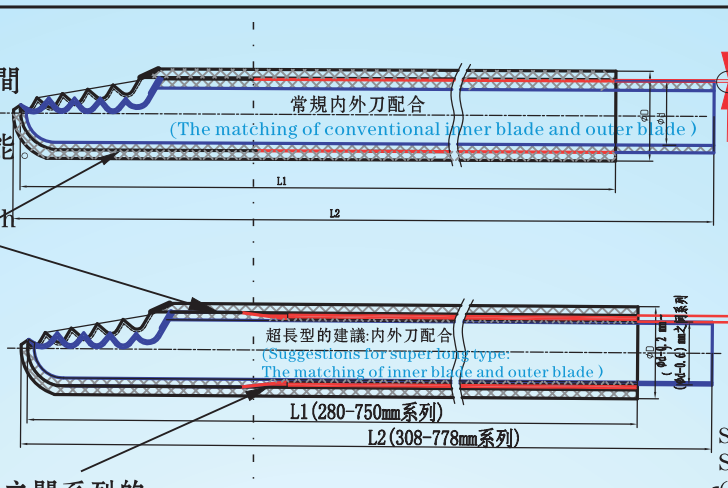

常規尾管處内、外單邊間隙(0.10~0.20)mm之間。
Single-side clearance between (0.10 ~ 0.20) mm at inside and outside of the conventional tail pipe

超長型的建議:
尾管處内、外單邊間隙
{(0.10+0.20)(0.20+0.20)}~~
{(0.10+0.60)(0.20+0.60)}mm之間系列。

Suggestions for super long type:
Single-side clearance between
{(0.10+0.20)(0.20+0.20)}~~
{(0.10+0.60)(0.20+0.60)}mm at inside and outside of the tail pipe

特殊超長管(200~800)mm之間系列的,
内刀内管連接尾管處建議采用錐度過渡至(Φd-0.20)~(Φd-0.60)mm之間系列(可參考常規常備高强度尾管系列規格選擇&批量定制尺寸),
以增加尾管處内外單邊間隙的加大,
以避免因過長内外壁易幹涉之問題。

For special super long tube (200 ~ 800)mm series, taper transitions to size series between (Φd-0.20) ~ (Φd-0.60)mm is recommended to adopt at the inner blade inner tube linking tail pipe (The conventional regular high-strength tail pipe series specification can be reference of selection & Mass customized sizes), which can add the increase of single-side clearance at inside and outside of the tail pipe, to avoid the easy-to-make-an-interference problem caused by overlength of internal and external wall.

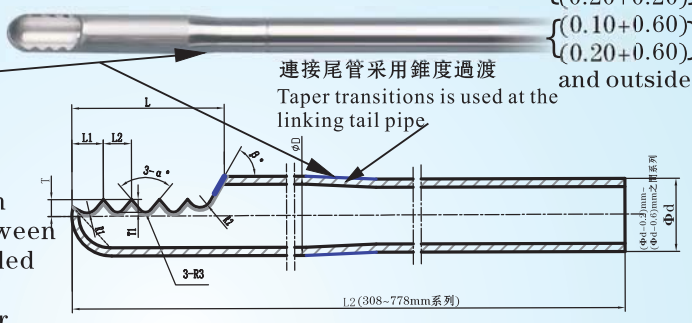

内(inner)

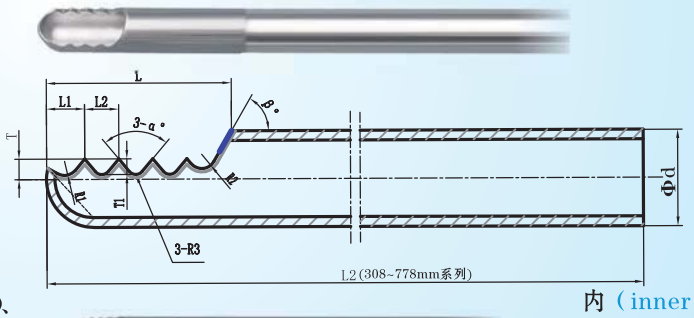

内(inner)

爲保證超高精密的直綫度⏤、同心度⊙、真圓度○、圓柱度⌭等等,内、外刀的外圓部分,在焊接後需在CNC上反復多次的超精研磨,
所以不建議做滾花處理,因滾花後也易被研磨掉。

In order to ensure ultra-high-precise straightness⏤, concentricity⊙, roundness○, cylindricity⌭, etc., the outer circle of the inner blade and the outer blade need to be superfinished repeatedly on the CNC equipment after being welded, so we do not recommend knurling, because it is easy to be ground off after knurling.

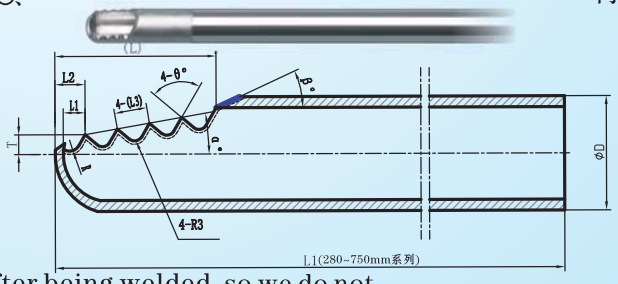

外(outer)



内外刀配合示意
(The matching of inner blade and outer blade as an example)

超鋒利刃、超高精密度内外配合、超高防銹,超高硬度、耐磨,超高抗衝擊性能、超高韌性,超高强度之焊接。
Welding with super sharp edge, ultra-high precision internal and external matching, superhigh rust resistance, superhigh hardness, wear resistance, high impact resistance, superhigh toughness and superhigh strength.

★.依圖依樣尺寸/公差/要求復合成型加工,可生產極為復雜、精密的柄部形狀。Compound contour machining according to the sizes/tolerances/requirements of drawings and samples, we can produce extreme complex and accurate holder profile.
図面、サンプル、寸法または公差の要求により複合成型加工を行い、極めて複雑、精密な柄部の形状を生産できる.

醫用工具及配件系列(耳鼻、内窺鏡、關節鏡刨刀)(常規常備齒型)
Medical tools and parts series (Otorhinolaryngologic, endoscopic, arthroscopic shaver blades) (Conventional and Stock Tooth Profiles)
医療器具及び部品シリーズ(耳鼻、内視鏡、関節鏡鉋刃)(通常常備歯型)

(超鋒利刃口&超高防銹(AA)&超高耐磨&超高精密度内外配合)
(Ultra-sharp cutting edge & ultra-high anti-rust (AA) & ultra-high wear -resistant & ultra-high precision cooperation of inner tubes and outer tubes)
(超鋭利刃先&超防錆(AA)&超耐磨耗&超精度内外接合)

材料:高硬度高抗衝擊高韌性超級鏡面不銹鋼ASTMF899(HRC54°~64°系列等級
Material: super mirror stainless steel ASTMF899 with high hardness, high impact and high toughness (HRC54°~64° series)
材質:高硬度高耐衝撃高靭性スーパー仕上げステンレスASTMF899(HRC54°~64°シリーズレベル)

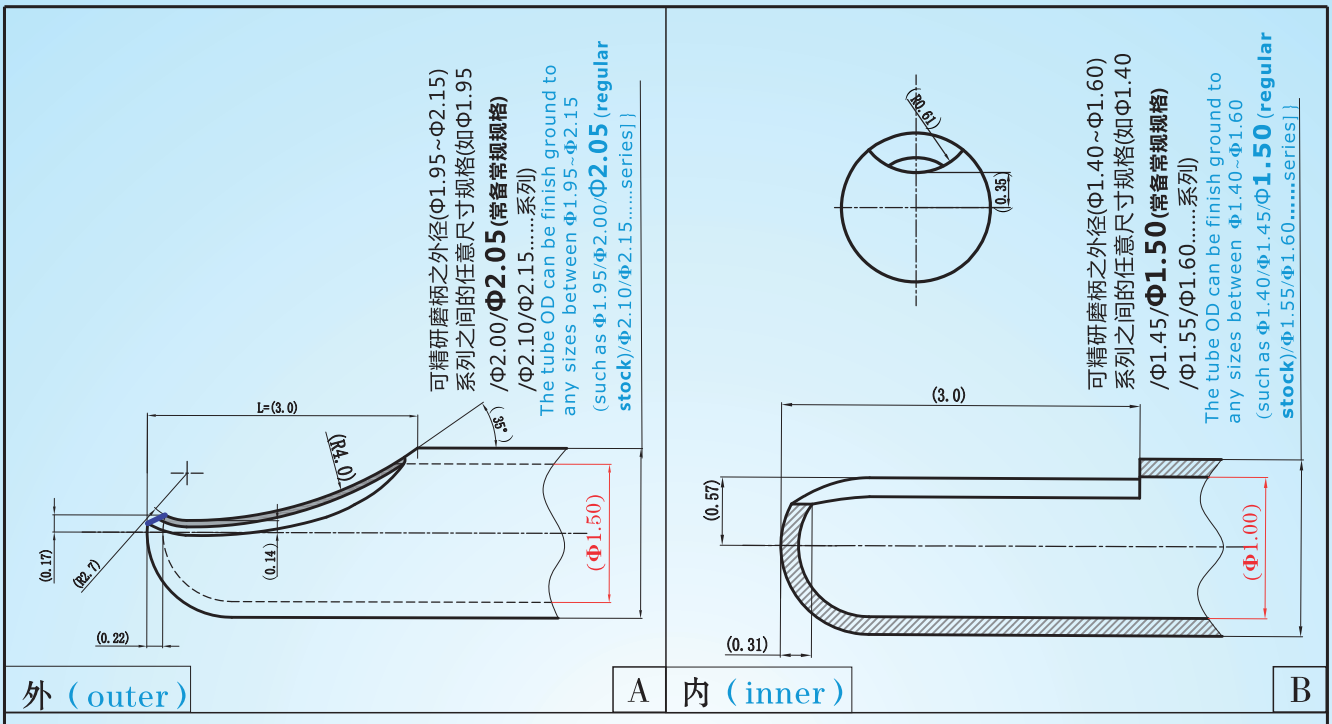

超鋒利刃、超高精密度内外配合、超高防銹,超高硬度、耐磨,超高抗衝擊性能、超高韌性,超高强度之焊接。
Welding with super sharp edge, ultra-high precision internal and external matching, superhigh rust resistance, superhigh hardness, wear resistance, high impact resistance, superhigh toughness and superhigh strength.
超鋭利の刃部、超高精密度の内外嵌め合い、超高防錆、超高硬度、耐磨耗、超高耐衝撃性、超高韧性、超高強度の溶接

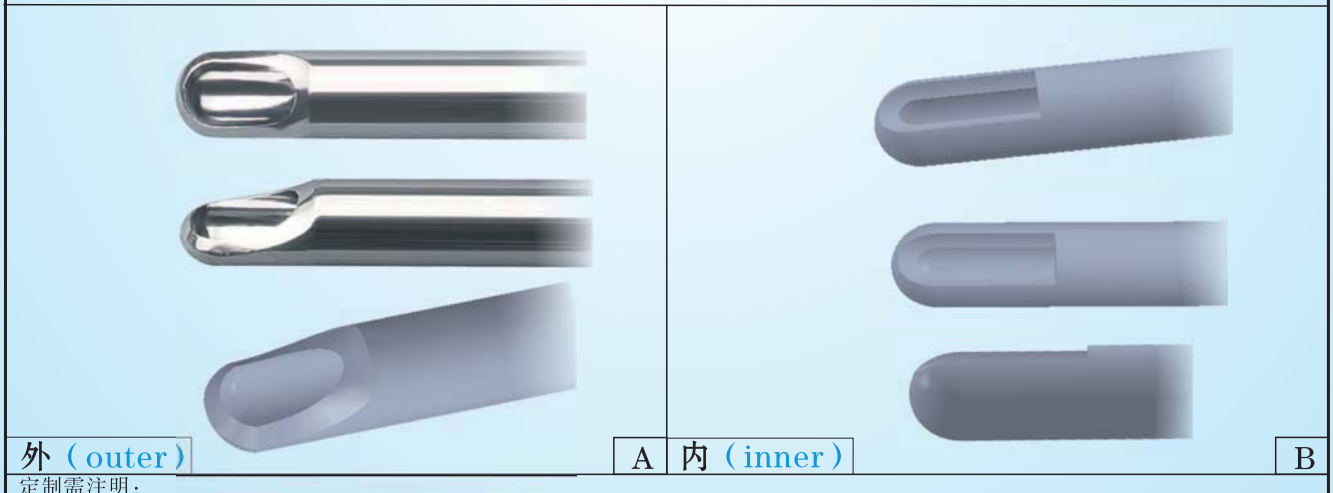

定制需注明:
①以上系列规格的总长度均可依要求定制
②以上只图示刨刀头部位置的内外径尺寸(头部刃外径尺寸,可依选择组合及配合要求精研磨至所需的尺寸公差,以超高精密内外刀配合)
③选好齿型(样本没有的齿型需批量才能定制或来图来样咨询)
④注明所需整套的详细的内、外规格、总长度及精研磨的公差要求……
Remarks needed for customization:
1.The overall length of the series specifications above can be customized according to customers' requirement.
2.This only shows the ID & OD of the shaver blade cutting edge position (Cutting edge OD will be according to customers' preferential combination, match up the requirement to finish grind to required tolerance, with ultra-high precision cooperation of inner tubes and outer tubes)
3.Choose the tooth profile. (For tooth profile that is not in our catalog, we can customize according to customers' drawings or samples but only with batch qty)
4. Need to know the detailed specifications of outer tube and inner tube, such as diameter, total length and tolerance requirement of fine grinding.

★.依圖依樣尺寸/公差/要求復合成型加工,可生產極為復雜、精密的柄部形狀。Compound contour machining according to the sizes/tolerances/requirements of drawings and samples, we can produce extreme complex and accurate holder profile.
図面、サンプル、寸法または公差の要求により複合成型加工を行い、極めて複雑、精密な柄部の形状を生産できる.

醫用工具及配件系列(耳鼻、内窺鏡、關節鏡刨刀)（常規常備齒型）
Medical tools and parts series (Otorhinolaryngologic, endoscopic, arthroscopic shaver blades) (Conventional and Stock Tooth Profiles)
医療器具及び部品シリーズ（耳鼻、内視鏡、関節鏡鉋刃）（通常常備歯型）

（超鋒利刃口&超高防銹（AA)&超高耐磨&超高精密度内外配合）
(Ultra-sharp cutting edge & ultra-high anti-rust (AA) & ultra-high wear -resistant & ultra-high precision cooperation of inner tubes and outer tubes)
(超鋭利刃先&超防錆(AA)&超耐磨耗&超精度内外接合)

材料：高硬度高抗衝擊高韌性超級鏡面不銹鋼ASTMF899(HRC54° ~64° 系列等級
Material: super mirror stainless steel ASTMF899 with high hardness, high impact and high toughness (HRC54° ~64° series)
材質：高硬度高耐衝撃高靭性スーパー仕上げステンレスASTMF899(HRC54° ~64° シリーズレベル)

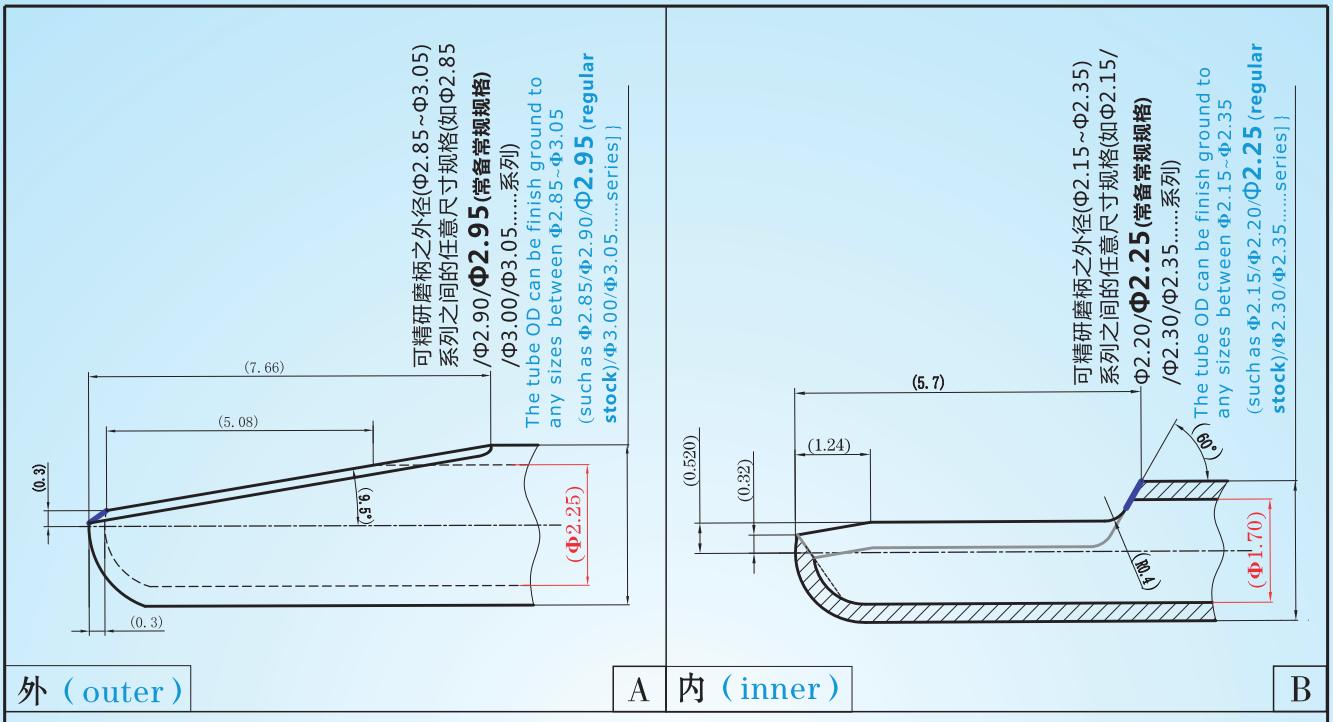

超鋒利刃、超高精密度内外配合、超高防銹，超高硬度、耐磨，超高抗衝擊性能、超高韌性，超高强度之焊接。
Welding with super sharp edge, ultra-high precision internal and external matching, superhigh rust resistance, superhigh hardness, wear resistance, high impact resistance, superhigh toughness and superhigh strength.
超鋭利の刃部、超高精密度の内外嵌め合い、超高防錆、超高硬度、耐磨耗、超高耐衝撃性、超高韧性、超高強度の溶接

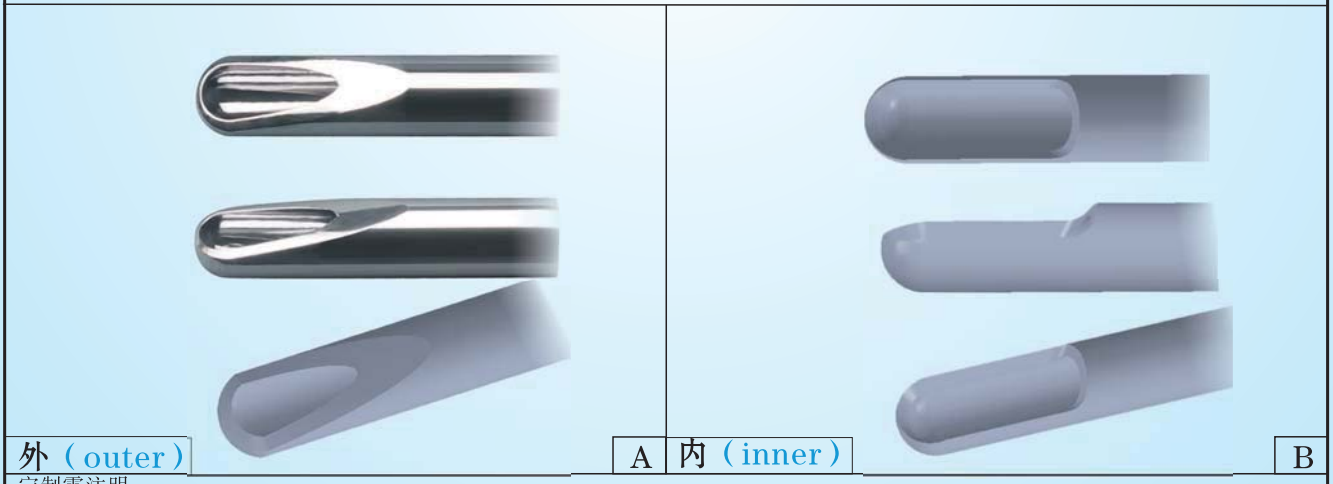

定制需注明：
①以上系列规格的总长度均可依要求定制
②以上只图示刨刀头部位置的内外径尺寸(头部刃外径尺寸,可依选择组合及配合要求精研磨至所需的尺寸公差,以超高精密内外刀配合)
③选好齿型（样本没有的齿型需批量才能定制或来图来样咨询）
④注明所需整套的详细的内、外规格、总长度及精研磨的公差要求……

Remarks needed for customization:
1.The overall length of the series specifications above can be customized according to customers' requirement.
2.This only shows the ID & OD of the shaver blade cutting edge position (Cutting edge OD will be according to customers' preferential combination, match up the requirement to finish grind to required tolerance, with ultra-high precision cooperation of inner tubes and outer tubes)
3.Choose the tooth profile. (For tooth profile that is not in our catalog, we can customize according to customers' drawings or samples but only with batch qty)
4. Need to know the detailed specifications of outer tube and inner tube, such as diameter, total length and tolerance requirement of fine grinding.

★.依圖依樣尺寸/公差/要求復合成型加工，可生產極為復雜、精密的柄部形狀。Compound contour machining according to the sizes/tolerances/requirements of drawings and samples, we can produce extreme complex and accurate holder profile.
図面、サンプル、寸法または公差の要求により複合成型加工を行い、極めて複雑、精密な柄部の形状を生産できる.

醫用工具及配件系列(耳鼻、内窺鏡、關節鏡刨刀)（常規常備齒型）
Medical tools and parts series (Otorhinolaryngologic, endoscopic, arthroscopic shaver blades) (Conventional and Stock Tooth Profiles)
医療器具及び部品シリーズ（耳鼻、内視鏡、関節鏡鉋刃）（通常常備歯型）

（超鋒利刃口&超高防銹（AA)&超高耐磨&超高精密度内外配合）
（Ultra-sharp cutting edge & ultra-high anti-rust (AA) & ultra-high wear -resistant & ultra-high precision cooperation of inner tubes and outer tubes)
（超鋭利刃先&超防錆（AA)&超耐磨耗&超精度内外接合）

材料：高硬度高抗衝擊高韌性超級鏡面不銹鋼ASTMF899(HRC54° ~64° 系列等級
Material: super mirror stainless steel ASTMF899 with high hardness, high impact and high toughness (HRC54° ~64° series)
材質：高硬度高耐衝撃高靭性スーパー仕上げステンレスASTMF899(HRC54° ~64° シリーズレベル)

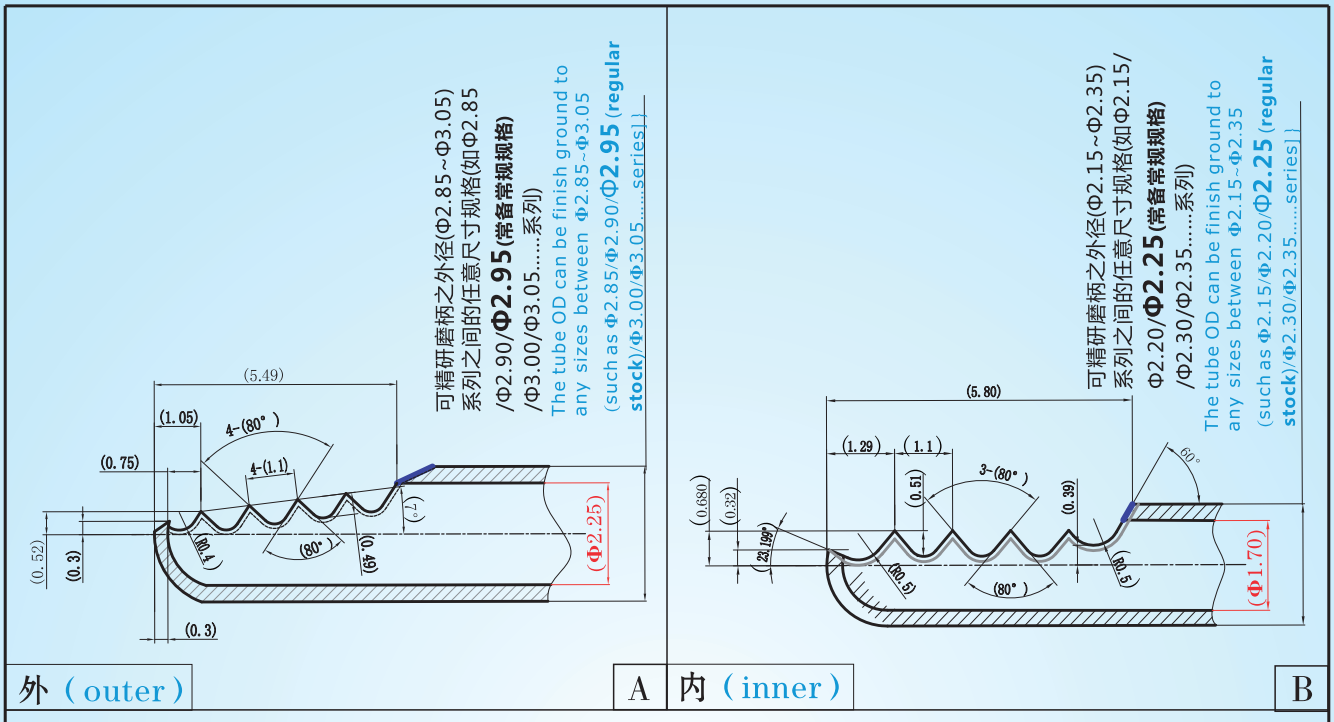

超鋒利刃、超高精密度内外配合、超高防銹，超高硬度、耐磨，超高抗衝擊性能、超高韌性，超高强度之焊接。
Welding with super sharp edge, ultra-high precision internal and external matching, superhigh rust resistance, superhigh hardness, wear resistance, high impact resistance, superhigh toughness and superhigh strength.
超鋭利の刃部、超高精密度の内外嵌め合い、超高防錆、超高硬度、耐磨耗、超高耐衝撃性、超高靭性、超高強度の溶接

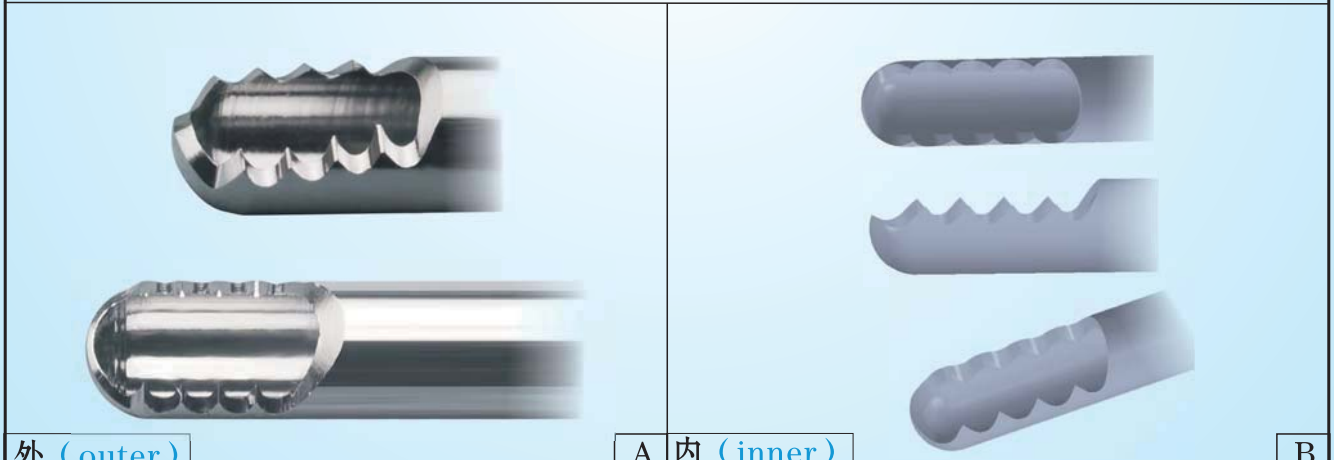

定制需注明：
①以上系列规格的总长度均可依要求定制
②以上只图示刨刀头部位置的内外径尺寸(头部刃外径尺寸,可依选择组合及配合要求精研磨至所需的尺寸公差,以超高精密内外刀配合)
③选好齿型（样本没有的齿型需批量才能定制或来图来样咨询）
④注明所需整套的详细的内、外规格、总长度及精研磨的公差要求……
Remarks needed for customization:
1.The overall length of the series specifications above can be customized according to customers' requirement.
2.This only shows the ID & OD of the shaver blade cutting edge position (Cutting edge OD will be according to customers' preferential combination, match up the requirement to finish grind to required tolerance, with ultra-high precision cooperation of inner tubes and outer tubes)
3.Choose the tooth profile. (For tooth profile that is not in our catalog, we can customize according to customers' drawings or samples but only with batch qty)
4. Need to know the detailed specifications of outer tube and inner tube, such as diameter, total length and tolerance requirement of fine grinding.

★.依圖依樣尺寸/公差/要求復合成型加工，可生產極為復雜、精密的柄部形狀。Compound contour machining according to the sizes/ tolerances/requirements of drawings and samples, we can produce extreme complex and accurate holder profile.
図面、サンプル、寸法または公差の要求により複合成型加工を行い、極めて複雑、精密な柄部の形状を生産できる.

醫用工具及配件系列(耳鼻、内窺鏡、關節鏡刨刀)(常規常備齒型)
Medical tools and parts series (Otorhinolaryngologic, endoscopic, arthroscopic shaver blades) (Conventional and Stock Tooth Profiles)
医療器具及び部品シリーズ(耳鼻、内視鏡、関節鏡鉋刃)(通常常備歯型)

(超鋒利刃口&超高防銹(AA)&超高耐磨&超高精密度内外配合)
(Ultra-sharp cutting edge & ultra-high anti-rust (AA) & ultra-high wear -resistant & ultra-high precision cooperation of inner tubes and outer tubes)
(超鋭利刃先&超防錆(AA)&超耐磨耗&超精度内外接合)

材料:高硬度高抗衝擊高韌性超級鏡面不銹鋼ASTMF899(HRC54° ~64° 系列等級
Material: super mirror stainless steel ASTMF899 with high hardness, high impact and high toughness (HRC54° ~64° series)
材質:高硬度高耐衝撃高靭性スーパー仕上げステンレスASTMF899(HRC54° ~64° シリーズレベル)

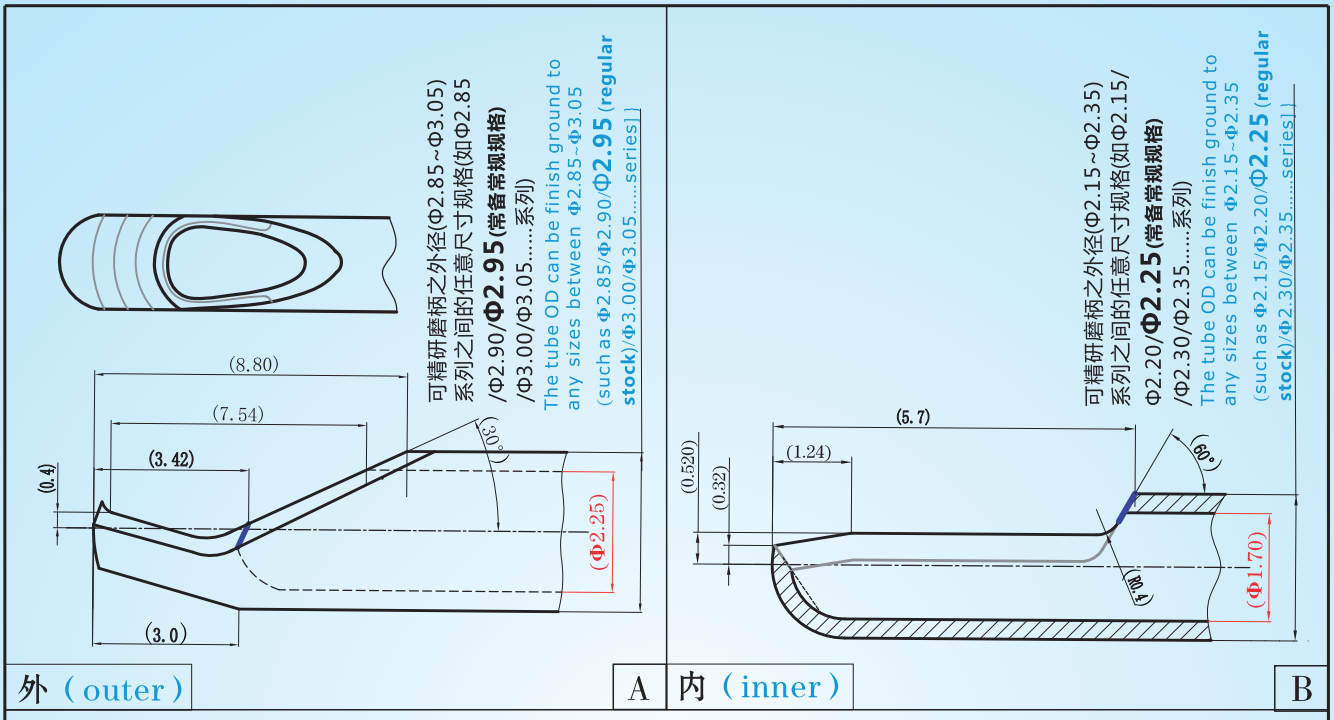

超鋒利刃、超高精密度内外配合、超高防銹,超高硬度、耐磨,超高抗衝擊性能、超高韌性,超高强度之焊接。
Welding with super sharp edge, ultra-high precision internal and external matching, superhigh rust resistance, superhigh hardness, wear resistance, high impact resistance, superhigh toughness and superhigh strength.
超鋭利の刃部、超高精密度の内外嵌め合い、超高防錆、超高硬度、耐磨耗、超高耐衝撃性、超高韌性、超高強度の溶接

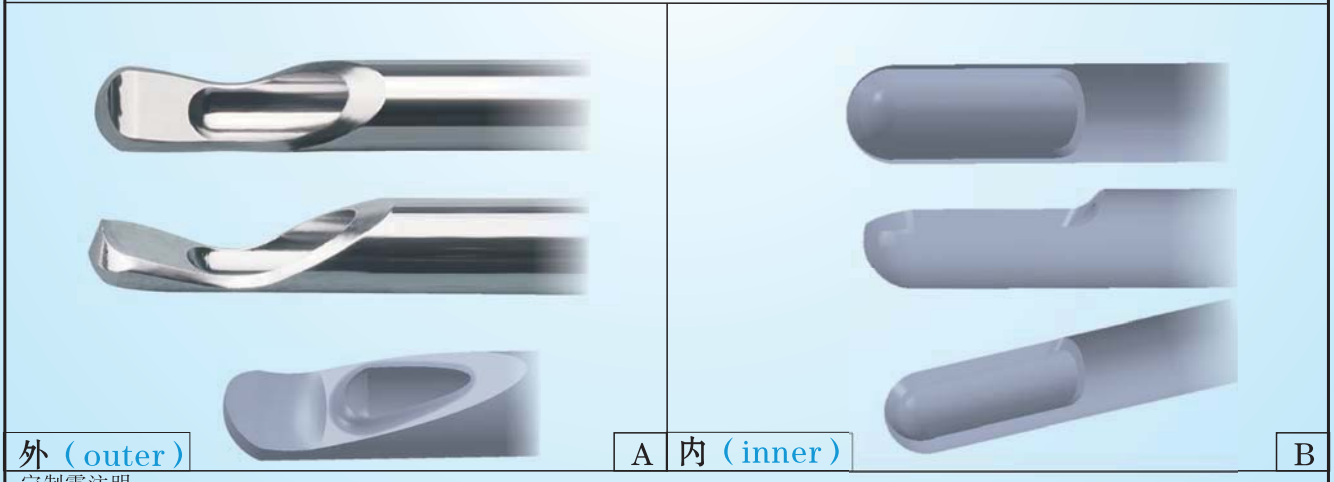

定制需注明:
①以上系列规格的总长度均可依要求定制
②以上只图示刨刀头部位置的内外径尺寸(头部刃外径尺寸,可依选择组合及配合要求精研磨至所需的尺寸公差,以超高精密内外刀配合)
③选好齿型(样本没有的齿型需批量才能定制或来图来样咨询)
④注明所需整套的详细的内、外规格、总长度及精研磨的公差要求……
Remarks needed for customization:
1.The overall length of the series specifications above can be customized according to customers' requirement.
2.This only shows the ID & OD of the shaver blade cutting edge position (Cutting edge OD will be according to customers' preferential combination, match up the requirement to finish grind to required tolerance, with ultra-high precision cooperation of inner tubes and outer tubes)
3.Choose the tooth profile. (For tooth profile that is not in our catalog, we can customize according to customers' drawings or samples but only with batch qty)
4. Need to know the detailed specifications of outer tube and inner tube, such as diameter, total length and tolerance requirement of fine grinding

★.依圖依樣尺寸/公差/要求復合成型加工,可生產極為復雜、精密的柄部形狀。Compound contour machining according to the sizes/tolerances/requirements of drawings and samples, we can produce extreme complex and accurate holder profile.
図面、サンプル、寸法または公差の要求により複合成型加工を行い、極めて複雑、精密な柄部の形状を生産できる.

醫用工具及配件系列(耳鼻、内窺鏡、關節鏡刨刀)（常規常備齒型）
Medical tools and parts series (Otorhinolaryngologic, endoscopic, arthroscopic shaver blades) (Conventional and Stock Tooth Profiles)
医療器具及び部品シリーズ（耳鼻、内視鏡、関節鏡鉋刃）（通常常備歯型）

（超鋒利刃口&超高防銹（AA)&超高耐磨&超高精密度内外配合）
(Ultra-sharp cutting edge & ultra-high anti-rust (AA) & ultra-high wear -resistant & ultra-high precision cooperation of inner tubes and outer tubes)
(超鋭利刃先&超防錆(AA)&超耐磨耗&超精度内外接合)

材料：高硬度高抗衝擊高韌性超級鏡面不銹鋼ASTMF899(HRC54° ~64° 系列等級
Material: super mirror stainless steel ASTMF899 with high hardness, high impact and high toughness (HRC54° ~64° series)
材質：高硬度高耐衝撃高靭性スーパー仕上げステンレスASTMF899(HRC54° ~64° シリーズレベル）

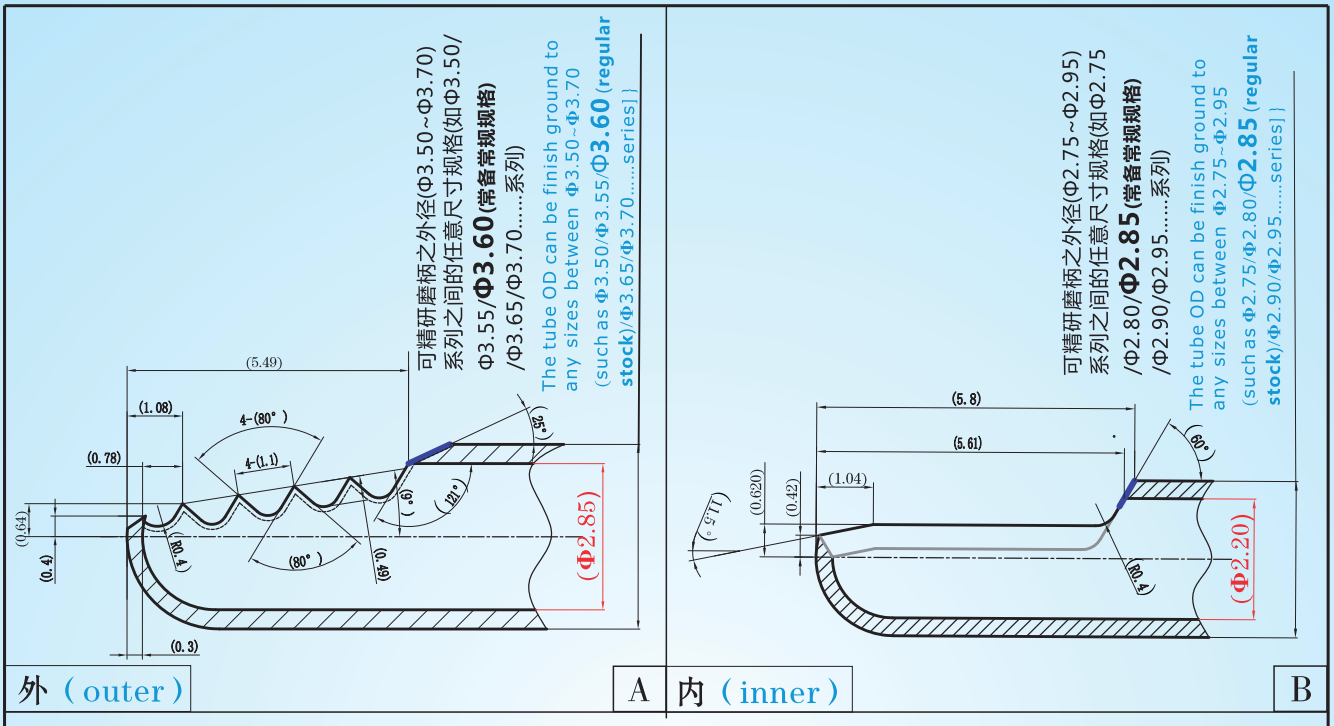

外（outer） A 内（inner） B

超鋒利刃、超高精密度内外配合、超高防銹，超高硬度、耐磨，超高抗衝擊性能、超高韌性，超高强度之焊接。
Welding with super sharp edge, ultra-high precision internal and external matching, superhigh rust resistance, superhigh hardness, wear resistance, high impact resistance, superhigh toughness and superhigh strength.
超鋭利の刃部、超高精密度の内外嵌め合い、超高防錆、超高硬度、耐磨耗、超高耐衝撃性、超高韌性、超高強度の溶接

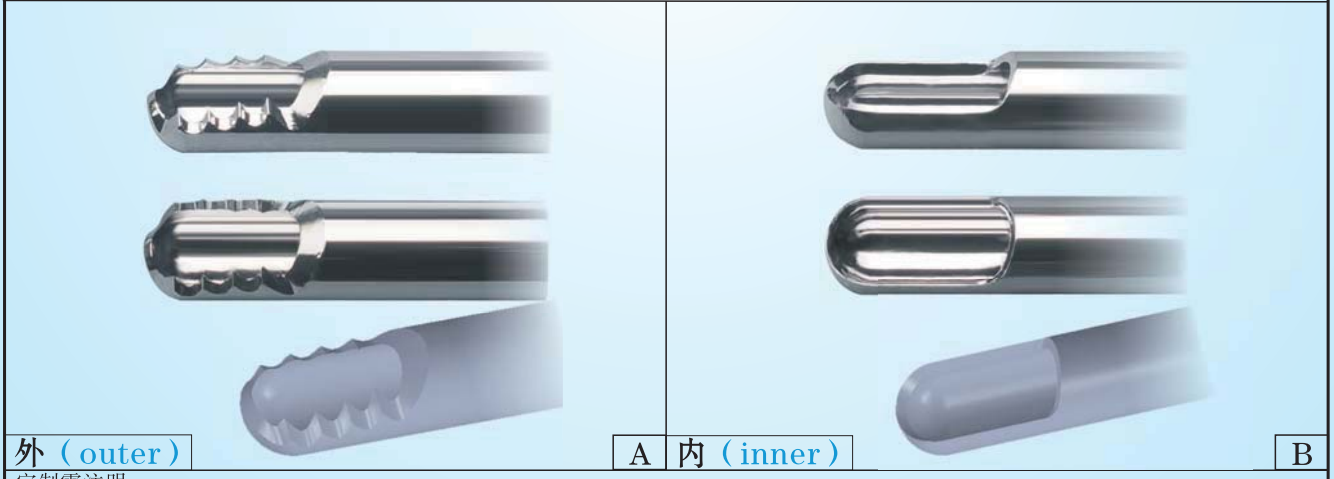

外（outer） A 内（inner） B

定制需注明：
①以上系列规格的总长度均可依要求定制
②以上只图示刨刀头部位置的内外径尺寸(头部刃外径尺寸,可依选择组合及配合要求精研磨至所需的尺寸公差,以超高精密内外刀配合)
③选好齿型（样本没有的齿型需批量才能定制或来图来样咨询）
④注明所需整套的详细的内、外规格、总长度及精研磨的公差要求……
Remarks needed for customization:
1.The overall length of the series specifications above can be customized according to customers' requirement.
2.This only shows the ID & OD of the shaver blade cutting edge position (Cutting edge OD will be according to customers' preferential combination, match up the requirement to finish grind to required tolerance, with ultra-high precision cooperation of inner tubes and outer tubes)
3.Choose the tooth profile. (For tooth profile that is not in our catalog, we can customize according to customers' drawings or samples but only with batch qty)
4. Need to know the detailed specifications of outer tube and inner tube, such as diameter, total length and tolerance requirement of fine grinding.

★.依圖依樣尺寸/公差/要求復合成型加工，可生產極為復雜、精密的柄部形狀。Compound contour machining according to the sizes/ tolerances/requirements of drawings and samples, we can produce extreme complex and accurate holder profile.
図面、サンプル、寸法または公差の要求により複合成型加工を行い、極めて複雑、精密な柄部の形状を生産できる.

醫用工具及配件系列(耳鼻、内窺鏡、關節鏡刨刀)(常規常備齒型)
Medical tools and parts series (Otorhinolaryngologic, endoscopic, arthroscopic shaver blades) (Conventional and Stock Tooth Profiles)
医療器具及び部品シリーズ(耳鼻、内視鏡、関節鏡鉋刃)(通常常備歯型)

(超鋒利刃口&超高防銹(AA)&超高耐磨&超高精密度内外配合)
(Ultra-sharp cutting edge & ultra-high anti-rust (AA) & ultra-high wear -resistant & ultra-high precision cooperation of inner tubes and outer tubes)
(超鋭利刃先&超防錆(AA)&超耐磨耗&超精度内外接合)

材料:高硬度高抗衝擊高韌性超級鏡面不銹鋼ASTMF899(HRC54°~64°系列等級
Material: super mirror stainless steel ASTMF899 with high hardness, high impact and high toughness (HRC54°~64° series)
材質:高硬度高耐衝撃高靭性スーパー仕上げステンレスASTMF899(HRC54°~64°シリーズレベル)

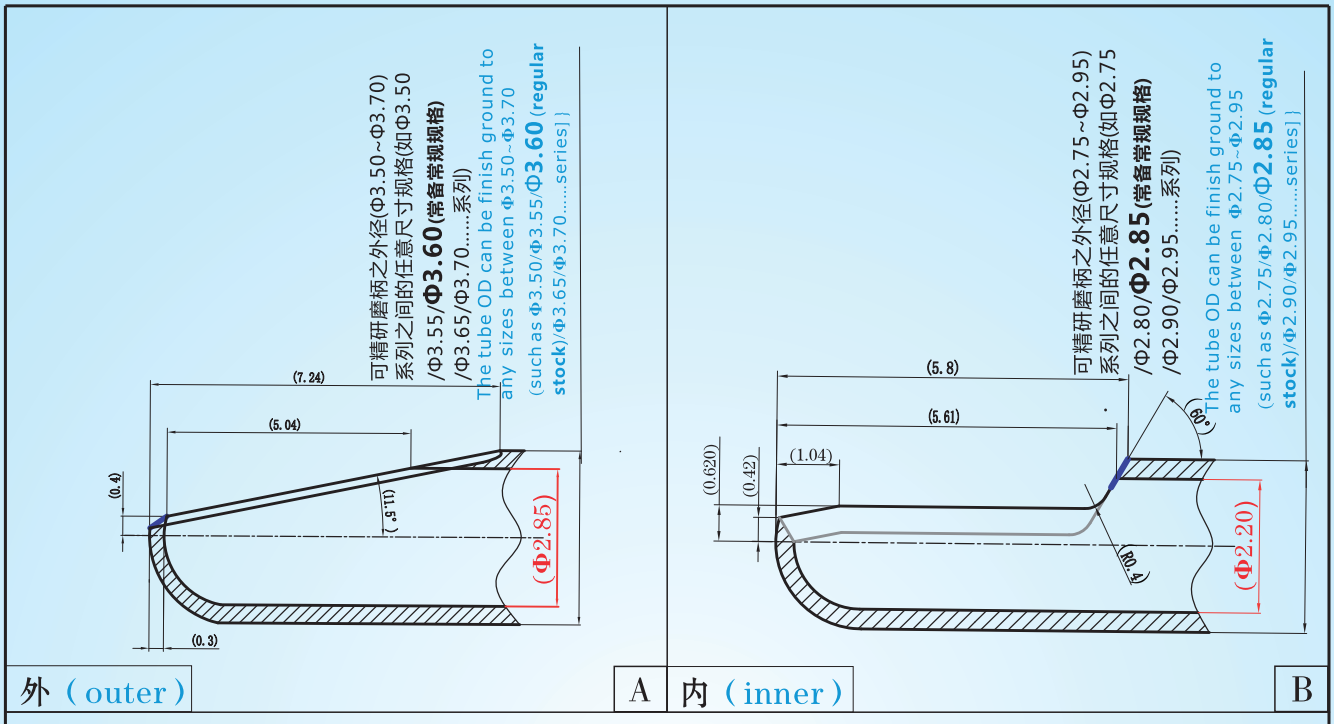

外(outer) A 内(inner) B

超鋒利刃、超高精密度内外配合、超高防銹,超高硬度、耐磨,超高抗衝擊性能、超高韌性,超高强度之焊接。
Welding with super sharp edge, ultra-high precision internal and external matching, superhigh rust resistance, superhigh hardness, wear resistance, high impact resistance, superhigh toughness and superhigh strength.
超鋭利の刃部、超高精密度の内外嵌め合い、超高防錆、超高硬度、耐磨耗、超高耐衝撃性、超高韌性、超高強度の溶接

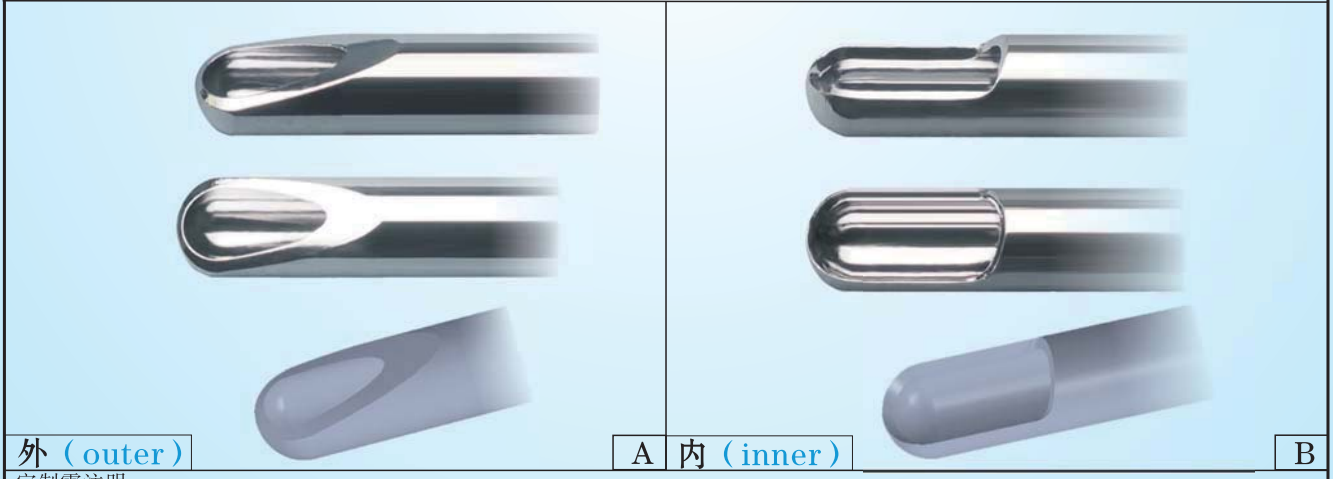

外(outer) A 内(inner) B

定制需注明:
①以上系列规格的总长度均可依要求定制
②以上只图示刨刀头部位置的内外径尺寸(头部刃外径尺寸,可依选择组合及配合要求精研磨至所需的尺寸公差,以超高精密内外刀配合)
③选好齿型(样本没有的齿型需批量才能定制或来图来样咨询)
④注明所需整套的详细的内、外规格、总长度及精研磨的公差要求……
Remarks needed for customization:
1.The overall length of the series specifications above can be customized according to customers' requirement.
2.This only shows the ID & OD of the shaver blade cutting edge position (Cutting edge OD will be according to customers' preferential combination, match up the requirement to finish grind to required tolerance, with ultra-high precision cooperation of inner tubes and outer tubes)
3.Choose the tooth profile. (For tooth profile that is not in our catalog, we can customize according to customers' drawings or samples but only with batch qty)
4. Need to know the detailed specifications of outer tube and inner tube, such as diameter, total length and tolerance requirement of fine grinding.

★.依圖依樣尺寸/公差/要求復合成型加工,可生產極為復雜、精密的柄部形狀。Compound contour machining according to the sizes/ tolerances/requirements of drawings and samples, we can produce extreme complex and accurate holder profile.
図面、サンプル、寸法または公差の要求により複合成型加工を行い、極めて複雑、精密な柄部の形状を生産できる.

醫用工具及配件系列(耳鼻、内窺鏡、關節鏡刨刀)(常規常備齒型)
Medical tools and parts series (Otorhinolaryngologic, endoscopic, arthroscopic shaver blades) (Conventional and Stock Tooth Profiles)
医療器具及び部品シリーズ(耳鼻、内視鏡、関節鏡鉋刃)(通常常備歯型)

(超鋒利刃口&超高防銹(AA)&超高耐磨&超高精密度内外配合)
(Ultra-sharp cutting edge & ultra-high anti-rust (AA) & ultra-high wear -resistant & ultra-high precision cooperation of inner tubes and outer tubes)
(超鋭利刃先&超防錆(AA)&超耐磨耗&超精度内外接合)

材料:高硬度高抗衝擊高韌性超級鏡面不銹鋼ASTMF899(HRC54° ~64° 系列等級
Material: super mirror stainless steel ASTMF899 with high hardness, high impact and high toughness (HRC54° ~64° series)
材質:高硬度高耐衝撃高靱性スーパー仕上げステンレスASTMF899(HRC54° ~64° シリーズレベル)

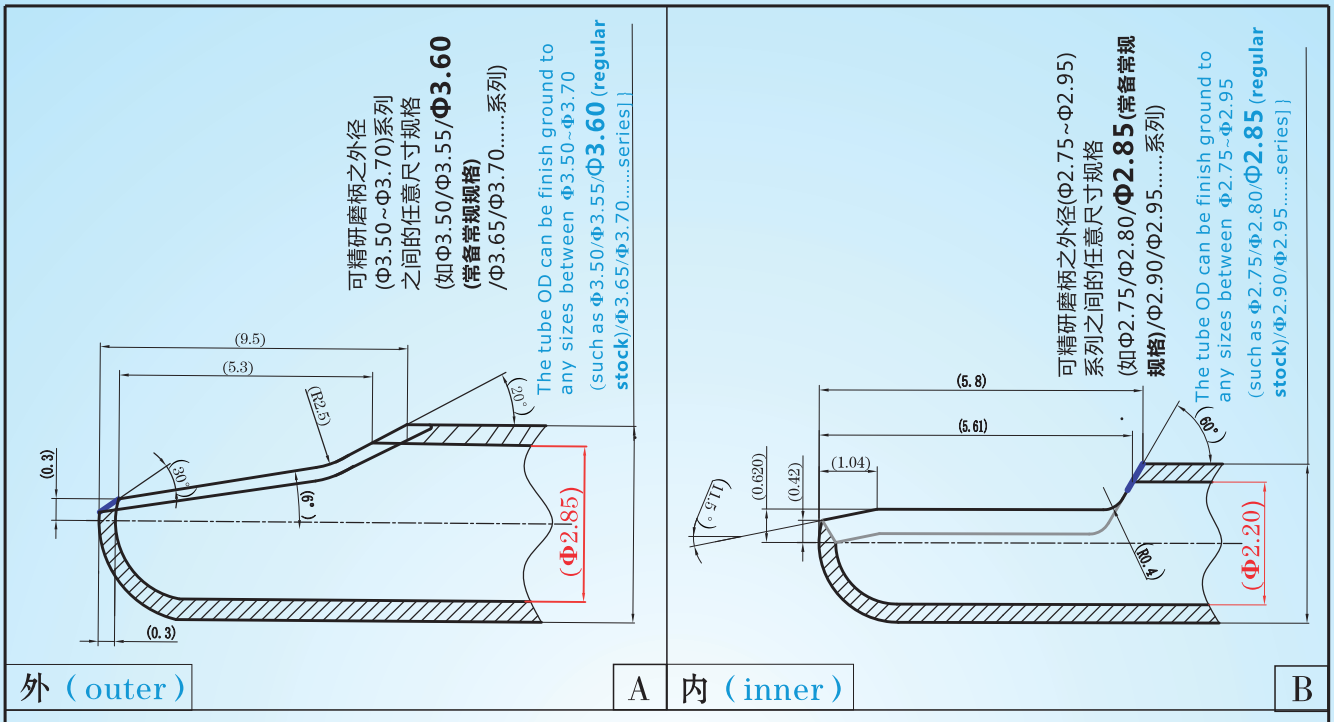

外(outer) A 内(inner) B

超鋒利刃、超高精密度内外配合、超高防銹,超高硬度、耐磨,超高抗衝擊性能、超高韌性,超高强度之焊接。
Welding with super sharp edge, ultra-high precision internal and external matching, superhigh rust resistance, superhigh hardness, wear resistance, high impact resistance, superhigh toughness and superhigh strength.
超鋭利の刃部、超高精密度の内外嵌め合い、超高防錆、超高硬度、耐磨耗、超高耐衝撃性、超高韌性、超高強度の溶接

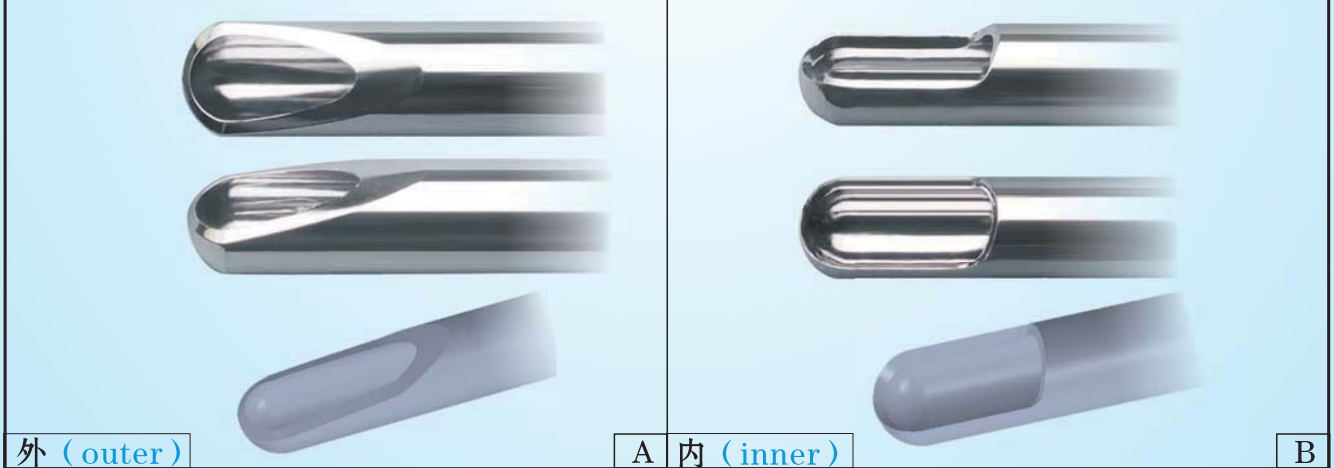

外(outer) A 内(inner) B

定制需注明:
①以上系列规格的总长度均可依要求定制
②以上只图示刨刀头部位置的内外径尺寸(头部刃外径尺寸,可依选择组合及配合要求精研磨至所需的尺寸公差,以超高精密内外刀配合)
③选好齿型(样本没有的齿型需批量才能定制或来图来样咨询)
④注明所需整套的详细的内、外规格、总长度及精研磨的公差要求……
Remarks needed for customization:
1.The overall length of the series specifications above can be customized according to customers' requirement.
2.This only shows the ID & OD of the shaver blade cutting edge position (Cutting edge OD will be according to customers' preferential combination, match up the requirement to finish grind to required tolerance, with ultra-high precision cooperation of inner tubes and outer tubes)
3.Choose the tooth profile. (For tooth profile that is not in our catalog, we can customize according to customers' drawings or samples but only with batch qty)
4. Need to know the detailed specifications of outer tube and inner tube, such as diameter, total length and tolerance requirement of fine grinding.

★.依圖依樣尺寸/公差/要求復合成型加工,可生產極為復雜、精密的柄部形狀。Compound contour machining according to the sizes/tolerances/requirements of drawings and samples, we can produce extreme complex and accurate holder profile.
図面、サンプル、寸法または公差の要求により複合成型加工を行い、極めて複雑、精密な柄部の形状を生産できる.

醫用工具及配件系列(耳鼻、内窺鏡、關節鏡刨刀)(常規常備齒型)
Medical tools and parts series (Otorhinolaryngologic, endoscopic, arthroscopic shaver blades) (Conventional and Stock Tooth Profiles)
医療器具及び部品シリーズ(耳鼻、内視鏡、関節鏡鉋刃)(通常常備歯型)

(超鋒利刃口&超高防銹(AA)&超高耐磨&超高精密度内外配合)
(Ultra-sharp cutting edge & ultra-high anti-rust (AA) & ultra-high wear -resistant & ultra-high precision cooperation of inner tubes and outer tubes)
(超鋭利刃先&超防錆(AA)&超耐磨耗&超精度内外接合)

材料:高硬度高抗衝擊高韌性超級鏡面不銹鋼ASTMF899(HRC54° ~64° 系列等級
Material: super mirror stainless steel ASTMF899 with high hardness, high impact and high toughness (HRC54° ~64° series)
材質:高硬度高耐衝撃高靭性スーパー仕上げステンレスASTMF899(HRC54° ~64° シリーズレベル)

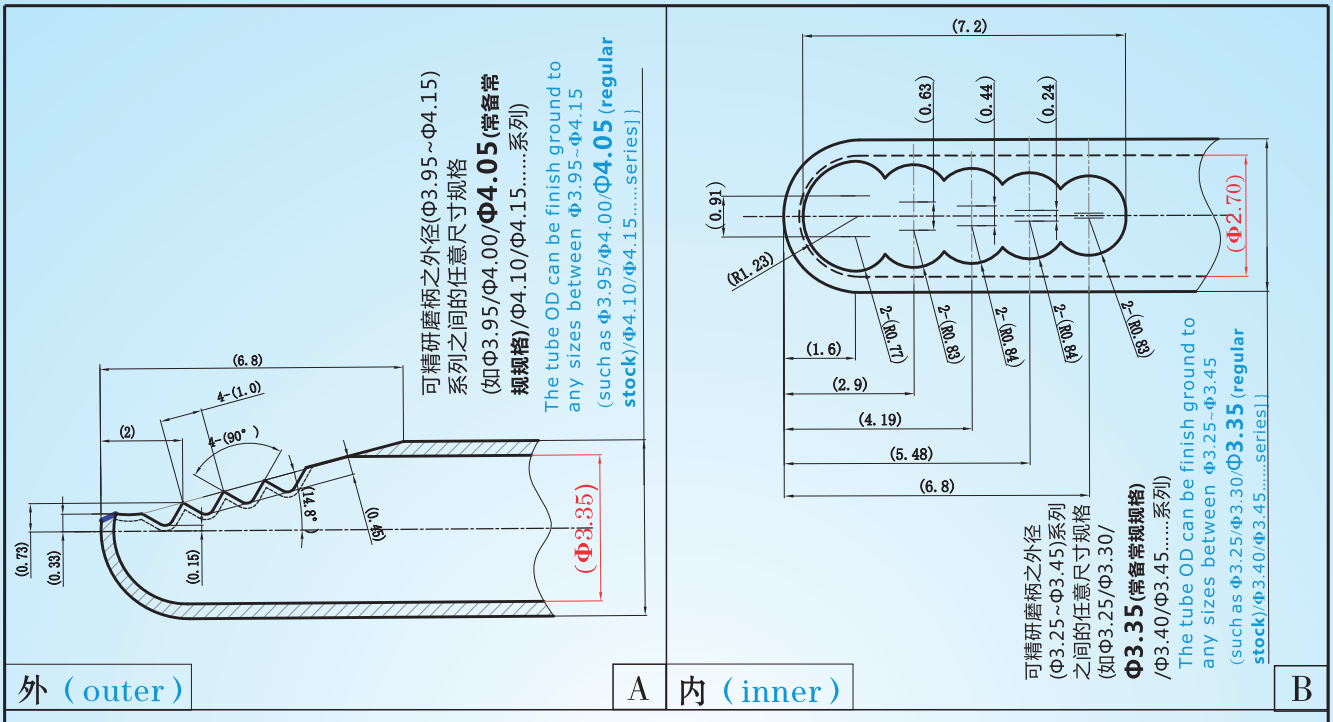

外(outer) A 内(inner) B

超鋒利刃、超高精密度内外配合、超高防銹,超高硬度、耐磨,超高抗衝擊性能、超高韌性,超高强度之焊接。
Welding with super sharp edge, ultra-high precision internal and external matching, superhigh rust resistance, superhigh hardness, wear resistance, high impact resistance, superhigh toughness and superhigh strength.
超鋭利の刃部、超高精密度の内外嵌め合い、超高防錆、超高硬度、耐磨耗、超高耐衝撃性、超高韌性、超高強度の溶接

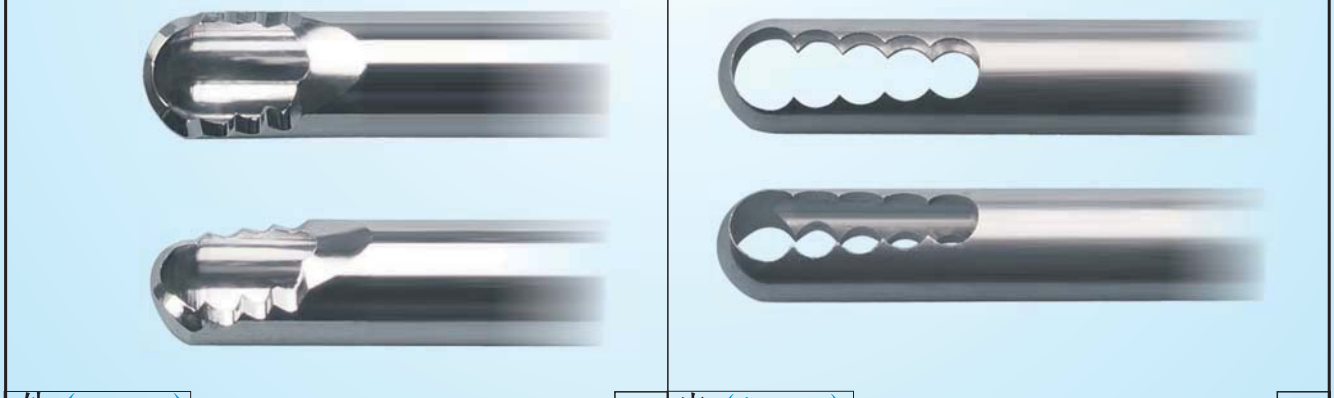

外(outer) A 内(inner) B

定制需注明:
①以上系列规格的总长度均可依要求定制
②以上只图示刨刀头部位置的内外径尺寸(头部刃外径尺寸,可依选择组合及配合要求精研磨至所需的尺寸公差,以超高精密内外刀配合)
③选好齿型(样本没有的齿型需批量才能定制或来图来样咨询)
④注明所需整套的详细的内、外规格、总长度及精研磨的公差要求……
Remarks needed for customization:
1.The overall length of the series specifications above can be customized according to customers' requirement.
2.This only shows the ID & OD of the shaver blade cutting edge position (Cutting edge OD will be according to customers' preferential combination, match up the requirement to finish grind to required tolerance, with ultra-high precision cooperation of inner tubes and outer tubes)
3.Choose the tooth profile. (For tooth profile that is not in our catalog, we can customize according to customers' drawings or samples but only with batch qty)
4. Need to know the detailed specifications of outer tube and inner tube, such as diameter, total length and tolerance requirement of fine grinding

★.依圖依樣尺寸/公差/要求復合成型加工,可生產極為復雜、精密的柄部形狀。Compound contour machining according to the sizes/ tolerances/requirements of drawings and samples, we can produce extreme complex and accurate holder profile.
図面、サンプル、寸法または公差の要求により複合成型加工を行い、極めて複雑、精密な柄部の形状を生産できる.

醫用工具及配件系列(耳鼻、内窺鏡、關節鏡刨刃)(常規常備齒型)
Medical tools and parts series (Otorhinolaryngologic, endoscopic, arthroscopic shaver blades) (Conventional and Stock Tooth Profiles)
医療器具及び部品シリーズ(耳鼻、内視鏡、関節鏡鉋刃)(通常常備歯型)

(超鋒利刃口&超高防銹(AA)&超高耐磨&超高精密度内外配合)
(Ultra-sharp cutting edge & ultra-high anti-rust (AA) & ultra-high wear -resistant & ultra-high precision cooperation of inner tubes and outer tubes)
(超鋭利刃先&超防錆(AA)&超耐磨耗&超精度内外接合)

材料:高硬度高抗衝擊高韌性超級鏡面不銹鋼ASTMF899(HRC54°~64°系列等級
Material: super mirror stainless steel ASTMF899 with high hardness, high impact and high toughness (HRC54°~64° series)
材質:高硬度高耐衝撃高靭性スーパー仕上げステンレスASTMF899(HRC54°~64°シリーズレベル)

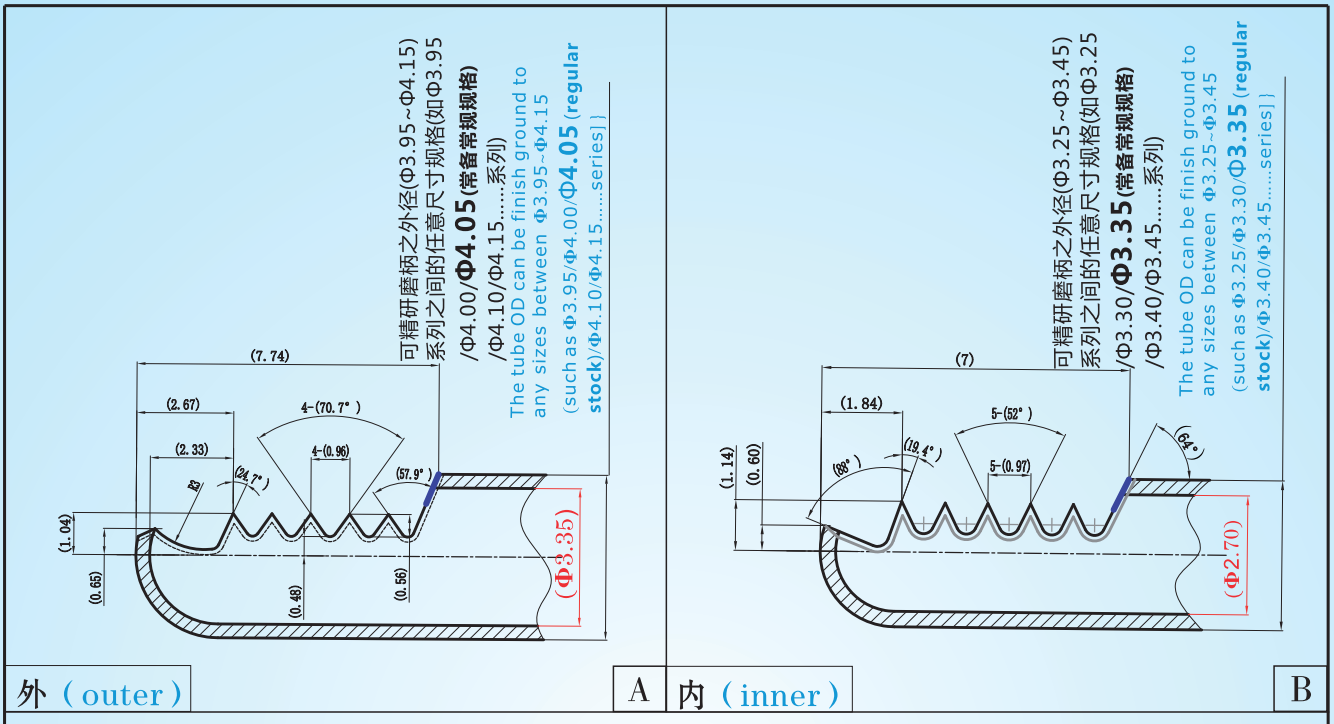

超鋒利刃、超高精密度内外配合、超高防銹,超高硬度、耐磨,超高抗衝擊性能、超高韌性,超高强度之焊接。
Welding with super sharp edge, ultra-high precision internal and external matching, superhigh rust resistance, superhigh hardness, wear resistance, high impact resistance, superhigh toughness and superhigh strength.
超鋭利の刃部、超高精密度の内外嵌め合い、超高防錆、超高硬度、耐磨耗、超高耐衝撃性、超高靭性、超高強度の溶接



定制需注明:
①以上系列规格的总长度均可依要求定制
②以上只图示刨刀头部位置的内外径尺寸(头部刃外径尺寸,可依选择组合及配合要求精研磨至所需的尺寸公差,以超高精密内外刀配合)
③选好齿型(样本没有的齿型需批量才能定制或来图来样咨询)
④注明所需整套的详细的内、外规格、总长度及精研磨的公差要求……
Remarks needed for customization:
1.The overall length of the series specifications above can be customized according to customers' requirement.
2.This only shows the ID & OD of the shaver blade cutting edge position (Cutting edge OD will be according to customers' preferential combination, match up the requirement to finish grind to required tolerance, with ultra-high precision cooperation of inner tubes and outer tubes)
3.Choose the tooth profile. (For tooth profile that is not in our catalog, we can customize according to customers' drawings or samples but only with batch qty)
4. Need to know the detailed specifications of outer tube and inner tube, such as diameter, total length and tolerance requirement of fine grinding.

★.依圖依樣尺寸/公差/要求復合成型加工,可生產極為復雜、精密的柄部形狀。Compound contour machining according to the sizes/tolerances/requirements of drawings and samples, we can produce extreme complex and accurate holder profile.
図面、サンプル、寸法または公差の要求により複合成型加工を行い、極めて複雑、精密な柄部の形状を生産できる.

醫用工具及配件系列(耳鼻、内窺鏡、關節鏡刨刃)(常規常備齒型)
Medical tools and parts series (Otorhinolaryngologic, endoscopic, arthroscopic shaver blades) (Conventional and Stock Tooth Profiles)
医療器具及び部品シリーズ(耳鼻、内視鏡、関節鏡鉋刃)(通常常備歯型)

(超鋒利刃口&超高防銹(AA)&超高耐磨&超高精密度内外配合)
(Ultra-sharp cutting edge & ultra-high anti-rust (AA) & ultra-high wear -resistant & ultra-high precision cooperation of inner tubes and outer tubes)
(超鋭利刃先&超防錆(AA)&超耐磨耗&超精度内外接合)

材料:高硬度高抗衝擊高韌性超級鏡面不銹鋼ASTMF899(HRC54°~64°系列等級
Material: super mirror stainless steel ASTMF899 with high hardness, high impact and high toughness (HRC54°~64° series)
材質:高硬度高耐衝撃高靭性スーパー仕上げステンレスASTMF899(HRC54°~64°シリーズレベル)

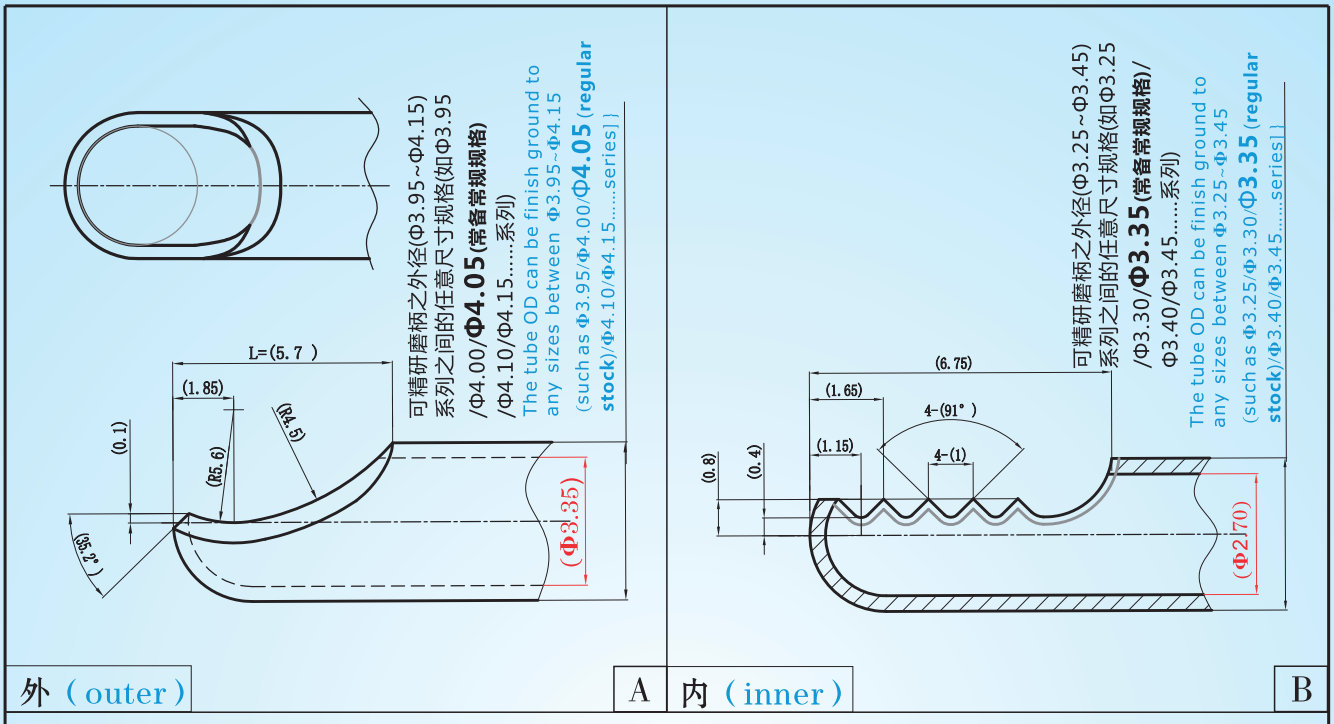

外(outer) A 内(inner) B

超鋒利刃、超高精密度内外配合、超高防銹,超高硬度、耐磨,超高抗衝擊性能、超高韌性,超高强度之焊接。
Welding with super sharp edge, ultra-high precision internal and external matching, superhigh rust resistance, superhigh hardness, wear resistance, high impact resistance, superhigh toughness and superhigh strength.
超鋭利の刃部、超高精密度の内外嵌め合い、超高防錆、超高硬度、耐磨耗、超高耐衝撃性、超高韌性、超高強度の溶接

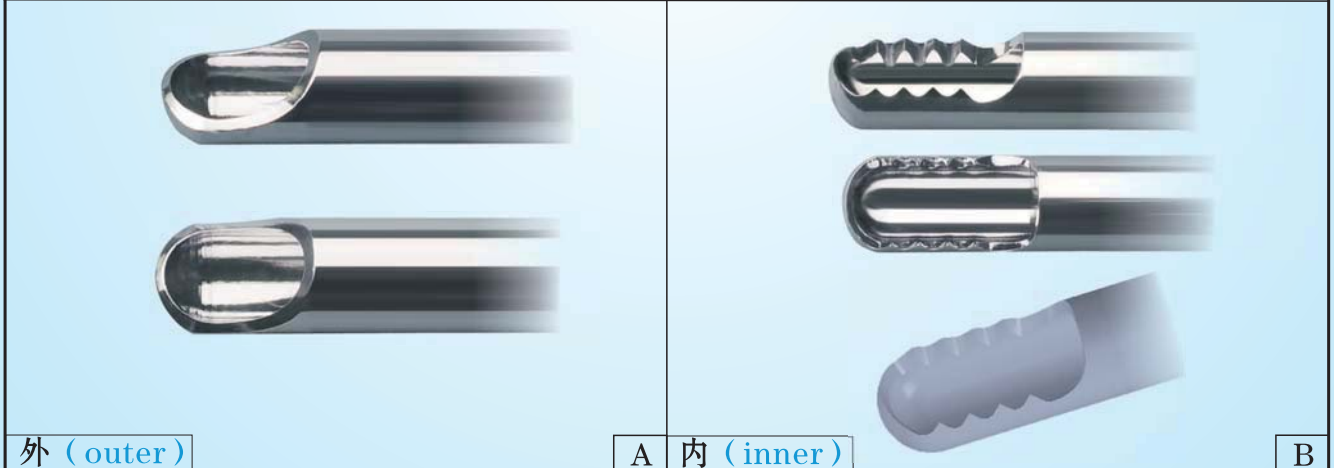

外(outer) A 内(inner) B

定制需注明:
①以上系列规格的总长度均可依要求定制
②以上只图示刨刀头部位置的内外径尺寸(头部刃外径尺寸,可依选择组合及配合要求精研磨至所需的尺寸公差,以超高精密内外刀配合)
③选好齿型(样本没有的齿型需批量才能定制或来图来样咨询)
④注明所需整套的详细的内、外规格、总长度及精研磨的公差要求……
Remarks needed for customization:
1.The overall length of the series specifications above can be customized according to customers' requirement.
2.This only shows the ID & OD of the shaver blade cutting edge position (Cutting edge OD will be according to customers' preferential combination, match up the requirement to finish grind to required tolerance, with ultra-high precision cooperation of inner tubes and outer tubes)
3.Choose the tooth profile. (For tooth profile that is not in our catalog, we can customize according to customers' drawings or samples but only with batch qty)
4. Need to know the detailed specifications of outer tube and inner tube, such as diameter, total length and tolerance requirement of fine grinding.

★.依圖依樣尺寸/公差/要求復合成型加工,可生產極為復雜、精密的柄部形狀。Compound contour machining according to the sizes/tolerances/requirements of drawings and samples, we can produce extreme complex and accurate holder profile.
図面、サンプル、寸法または公差の要求により複合成型加工を行い、極めて複雑、精密な柄部の形状を生産できる.

醫用工具及配件系列(耳鼻、内窺鏡、關節鏡刨刀)（常規常備齒型）
Medical tools and parts series (Otorhinolaryngologic, endoscopic, arthroscopic shaver blades) (Conventional and Stock Tooth Profiles)
医療器具及び部品シリーズ（耳鼻、内視鏡、関節鏡鉋刃）（通常常備歯型）

（超鋒利刃口&超高防銹（AA)&超高耐磨&超高精密度内外配合）
（Ultra-sharp cutting edge & ultra-high anti-rust (AA) & ultra-high wear -resistant & ultra-high precision cooperation of inner tubes and outer tubes)
（超鋭利刃先&超防錆(AA)&超耐磨耗&超精度内外接合）

材料：高硬度高抗衝擊高韌性超級鏡面不銹鋼ASTMF899(HRC54° ~64° 系列等級
Material: super mirror stainless steel ASTMF899 with high hardness, high impact and high toughness (HRC54° ~64° series)
材質：高硬度高耐衝撃高靭性スーパー仕上げステンレスASTMF899(HRC54° ~64° シリーズレベル）

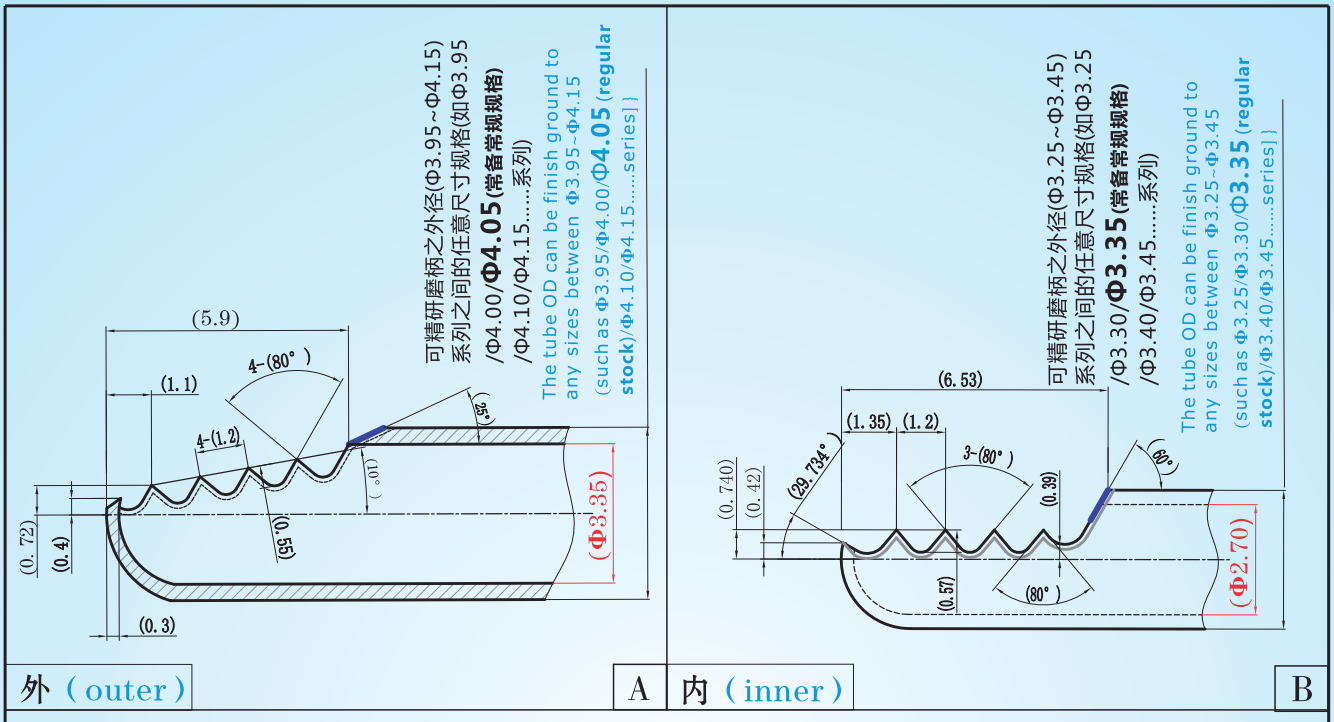

外（outer） A 内（inner） B

超鋒利刃、超高精密度内外配合、超高防銹，超高硬度、耐磨，超高抗衝擊性能、超高韌性，超高强度之焊接。
Welding with super sharp edge, ultra-high precision internal and external matching, superhigh rust resistance, superhigh hardness, wear resistance, high impact resistance, superhigh toughness and superhigh strength.
超鋭利の刃部、超高精密度の内外嵌め合い、超高防錆、超高硬度、耐磨耗、超高耐衝撃性、超高韌性、超高強度の溶接

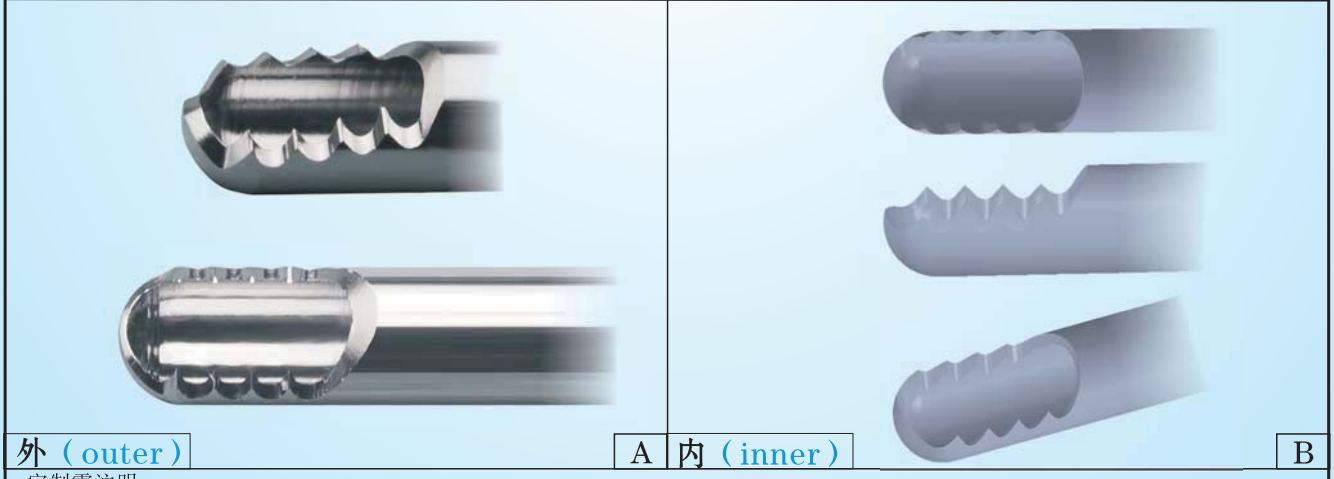

外（outer） A 内（inner） B

定制需注明：
①以上系列规格的总长度均可依要求定制
②以上只图示刨刀头部位置的内外径尺寸(头部刃外径尺寸,可依选择组合及配合要求精研磨至所需的尺寸公差,以超高精密内外刀配合)
③选好齿型（样本没有的齿型需批量才能定制或来图来样咨询）
④注明所需整套的详细的内、外规格、总长度及精研磨的公差要求……
Remarks needed for customization:
1.The overall length of the series specifications above can be customized according to customers' requirement.
2.This only shows the ID & OD of the shaver blade cutting edge position (Cutting edge OD will be according to customers' preferential combination, match up the requirement to finish grind to required tolerance, with ultra-high precision cooperation of inner tubes and outer tubes)
3.Choose the tooth profile. (For tooth profile that is not in our catalog, we can customize according to customers' drawings or samples but only with batch qty)
4. Need to know the detailed specifications of outer tube and inner tube, such as diameter, total length and tolerance requirement of fine grinding.

★.依圖依樣尺寸/公差/要求復合成型加工，可生產極為復雜、精密的柄部形狀。Compound contour machining according to the sizes/ tolerances/requirements of drawings and samples, we can produce extreme complex and accurate holder profile.
図面、サンプル、寸法または公差の要求により複合成型加工を行い、極めて複雑、精密な柄部の形状を生産できる.

醫用工具及配件系列(耳鼻、内窺鏡、關節鏡刨刀)(常規常備齒型)
Medical tools and parts series (Otorhinolaryngologic, endoscopic, arthroscopic shaver blades) (Conventional and Stock Tooth Profiles)
医療器具及び部品シリーズ(耳鼻、内視鏡、関節鏡鉋刃)(通常常備歯型)

(超鋒利刃口&超高防銹(AA)&超高耐磨&超高精密度内外配合)
(Ultra-sharp cutting edge & ultra-high anti-rust (AA) & ultra-high wear -resistant & ultra-high precision cooperation of inner tubes and outer tubes)
(超鋭利刃先&超防錆(AA)&超耐磨耗&超精度内外接合)

材料:高硬度高抗衝擊高韌性超級鏡面不銹鋼ASTMF899(HRC54° ~64° 系列等級
Material: super mirror stainless steel ASTMF899 with high hardness, high impact and high toughness (HRC54° ~64° series)
材質:高硬度高耐衝撃高靭性スーパー仕上げステンレスASTMF899(HRC54° ~64° シリーズレベル)

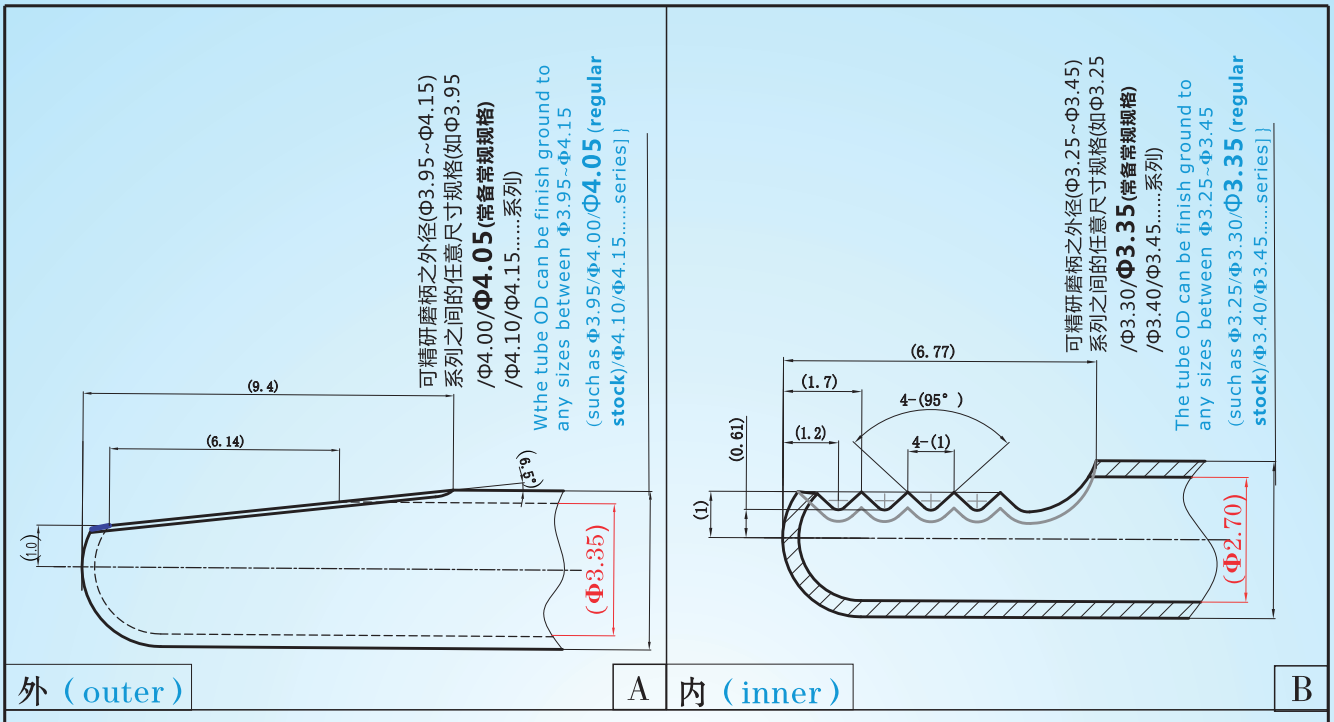

超鋒利刃、超高精密度内外配合、超高防銹,超高硬度、耐磨,超高抗衝擊性能、超高韌性,超高强度之焊接。
Welding with super sharp edge, ultra-high precision internal and external matching, superhigh rust resistance, superhigh hardness, wear resistance, high impact resistance, superhigh toughness and superhigh strength.
超鋭利の刃部、超高精密度の内外嵌め合い、超高防錆、超高硬度、耐磨耗、超高耐衝撃性、超高靭性、超高強度の溶接

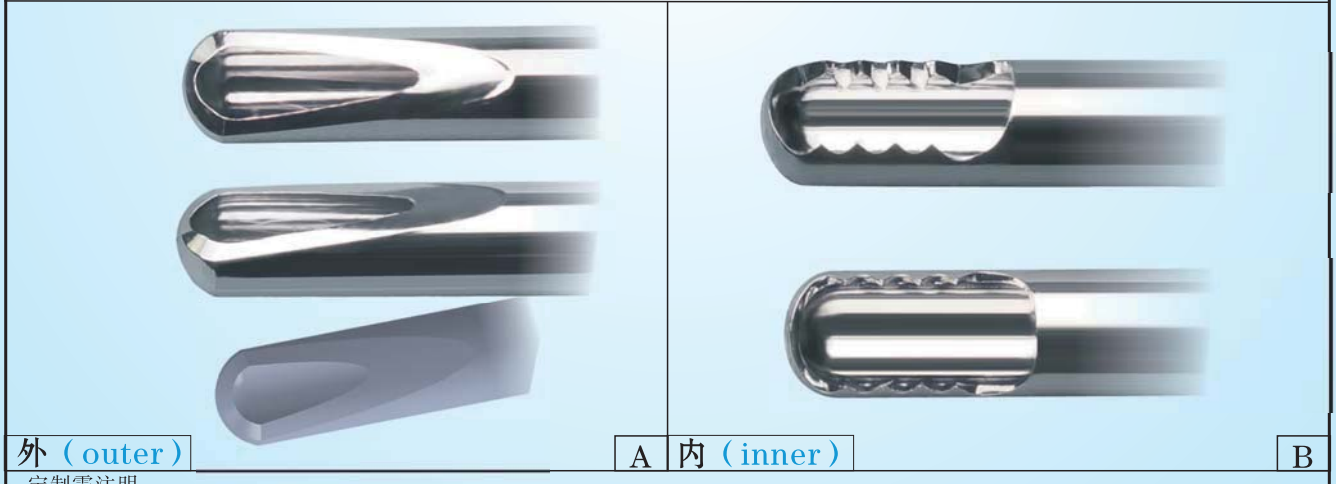

定制需注明:
①以上系列规格的总长度均可依要求定制
②以上只图示刨刀头部位置的内外径尺寸(头部刃外径尺寸,可依选择组合及配合要求精研磨至所需的尺寸公差,以超高精密内外刀配合)
③选好齿型(样本没有的齿型需批量才能定制或来图来样咨询)
④注明所需整套的详细的内、外规格、总长度及精研磨的公差要求……

Remarks needed for customization:
1.The overall length of the series specifications above can be customized according to customers' requirement.
2.This only shows the ID & OD of the shaver blade cutting edge position (Cutting edge OD will be according to customers' preferential combination, match up the requirement to finish grind to required tolerance, with ultra-high precision cooperation of inner tubes and outer tubes)
3.Choose the tooth profile. (For tooth profile that is not in our catalog, we can customize according to customers' drawings or samples but only with batch qty)
4. Need to know the detailed specifications of outer tube and inner tube, such as diameter, total length and tolerance requirement of fine grinding.

★.依圖依樣尺寸/公差/要求復合成型加工,可生產極為復雜、精密的柄部形狀。Compound contour machining according to the sizes/ tolerances/requirements of drawings and samples, we can produce extreme complex and accurate holder profile.
図面、サンプル、寸法または公差の要求により複合成型加工を行い、極めて複雑、精密な柄部の形状を生産できる.

醫用工具及配件系列(耳鼻、内窺鏡、關節鏡刨刀)（常規常備齒型）
Medical tools and parts series (Otorhinolaryngologic, endoscopic, arthroscopic shaver blades) (Conventional and Stock Tooth Profiles)
医療器具及び部品シリーズ（耳鼻、内視鏡、関節鏡鉋刃）（通常常備歯型）

（超鋒利刃口&超高防銹（AA)&超高耐磨&超高精密度内外配合）
(Ultra-sharp cutting edge & ultra-high anti-rust (AA) & ultra-high wear -resistant & ultra-high precision cooperation of inner tubes and outer tubes)
(超鋭利刃先&超防錆(AA)&超耐磨耗&超精度内外接合)

材料：高硬度高抗衝擊高韌性超級鏡面不銹鋼ASTMF899(HRC54°~64°系列等級
Material: super mirror stainless steel ASTMF899 with high hardness, high impact and high toughness (HRC54°~64° series)
材質：高硬度高耐衝撃高靭性スーパー仕上げステンレスASTMF899(HRC54°~64°シリーズレベル)

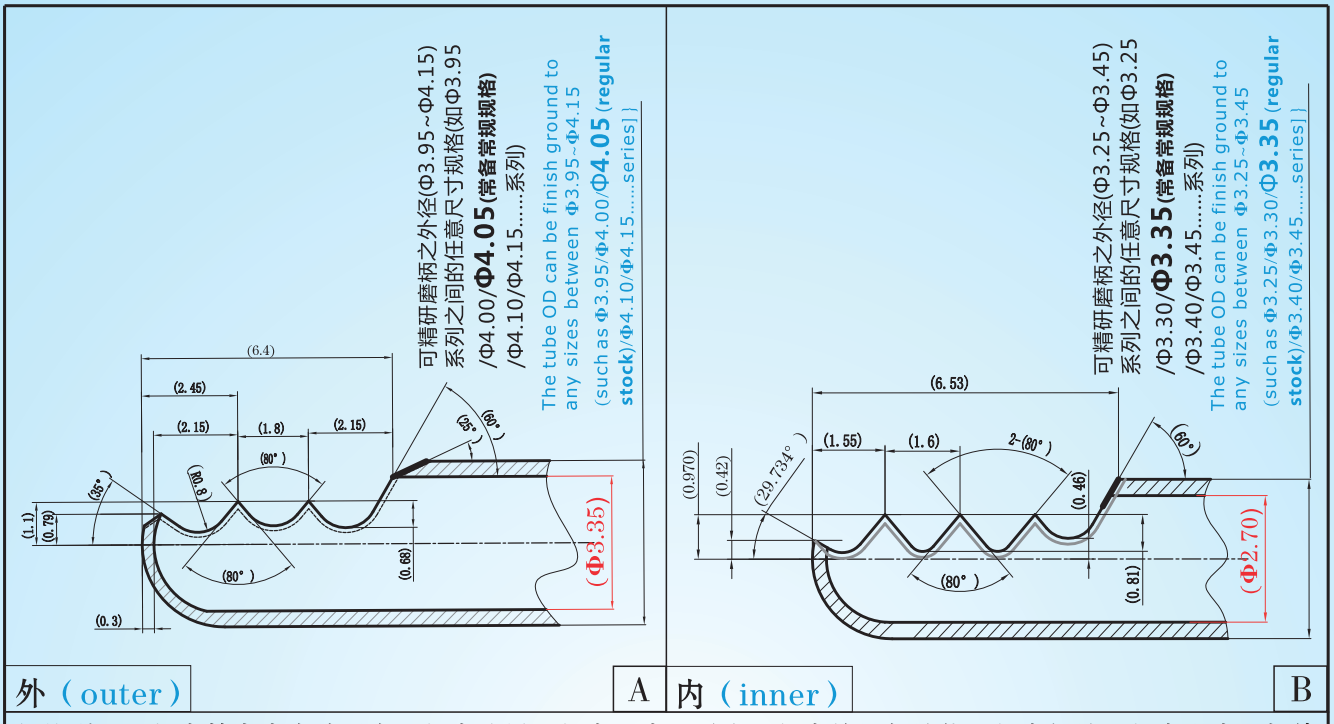

超鋒利刃、超高精密度内外配合、超高防銹，超高硬度、耐磨，超高抗衝擊性能、超高韌性，超高强度之焊接。
Welding with super sharp edge, ultra-high precision internal and external matching, superhigh rust resistance, superhigh hardness, wear resistance, high impact resistance, superhigh toughness and superhigh strength.
超鋭利の刃部、超高精密度の内外嵌め合い、超高防錆、超高硬度、耐磨耗、超高耐衝撃性、超高韌性、超高強度の溶接

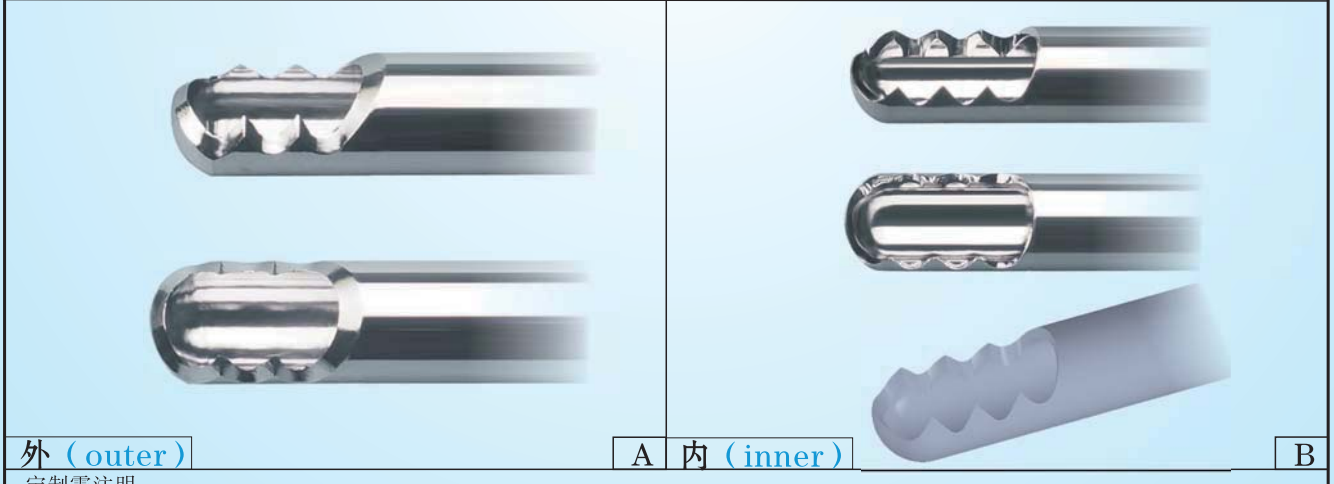

定制需注明：
①以上系列规格的总长度均可依要求定制
②以上只图示刨刀头部位置的内外径尺寸(头部刃外径尺寸,可依选择组合及配合要求精研磨至所需的尺寸公差,以超高精密内外刀配合)
③选好齿型（样本没有的齿型需批量才能定制或来图来样咨询）
④注明所需整套的详细的内、外规格、总长度及精研磨的公差要求……

Remarks needed for customization:
1.The overall length of the series specifications above can be customized according to customers' requirement.
2.This only shows the ID & OD of the shaver blade cutting edge position (Cutting edge OD will be according to customers' preferential combination, match up the requirement to finish grind to required tolerance, with ultra-high precision cooperation of inner tubes and outer tubes)
3.Choose the tooth profile. (For tooth profile that is not in our catalog, we can customize according to customers' drawings or samples but only with batch qty)
4. Need to know the detailed specifications of outer tube and inner tube, such as diameter, total length and tolerance requirement of fine grinding.

★.依圖依樣尺寸/公差/要求復合成型加工，可生產極為復雜、精密的柄部形狀。Compound contour machining according to the sizes/tolerances/requirements of drawings and samples, we can produce extreme complex and accurate holder profile.
図面、サンプル、寸法または公差の要求により複合成型加工を行い、極めて複雑、精密な柄部の形状を生産できる.

醫用工具及配件系列(耳鼻、内窺鏡、關節鏡刨刀)（常規常備齒型）
Medical tools and parts series (Otorhinolaryngologic, endoscopic, arthroscopic shaver blades) (Conventional and Stock Tooth Profiles)
医療器具及び部品シリーズ（耳鼻、内視鏡、関節鏡鉋刃）（通常常備歯型）

（超鋒利刃口&超高防銹（AA)&超高耐磨&超高精密度内外配合）
(Ultra-sharp cutting edge & ultra-high anti-rust (AA) & ultra-high wear -resistant & ultra-high precision cooperation of inner tubes and outer tubes)
(超鋭利刃先&超防錆(AA)&超耐磨耗&超精度内外接合)

材料：高硬度高抗衝擊高韌性超級鏡面不銹鋼ASTMF899(HRC54°~64°系列等級
Material: super mirror stainless steel ASTMF899 with high hardness, high impact and high toughness (HRC54°~64° series)
材質：高硬度高耐衝撃高靭性スーパー仕上げステンレスASTMF899(HRC54°~64°シリーズレベル)

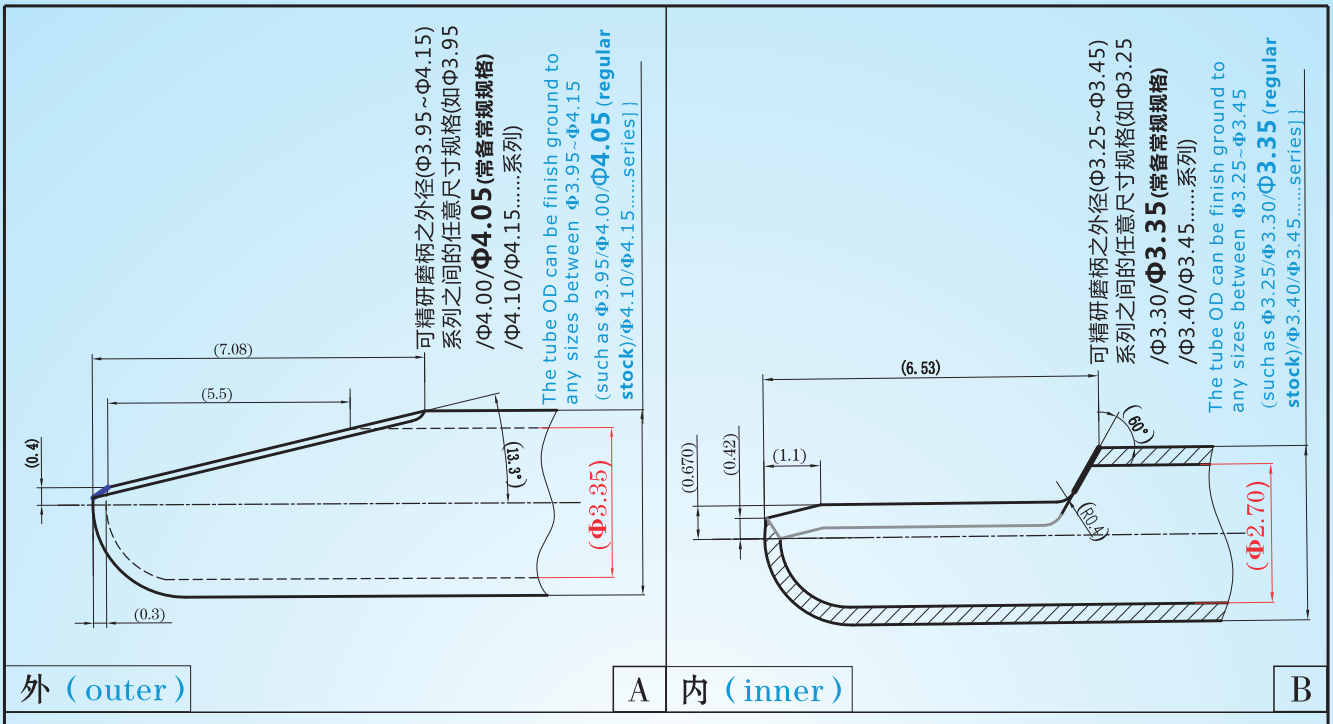

外（outer） A 内（inner） B

超鋒利刃、超高精密度内外配合、超高防銹，超高硬度、耐磨，超高抗衝擊性能、超高韌性，超高强度之焊接。
Welding with super sharp edge, ultra-high precision internal and external matching, superhigh rust resistance, superhigh hardness, wear resistance, high impact resistance, superhigh toughness and superhigh strength.
超鋭利の刃部、超高精密度の内外嵌め合い、超高防錆、超高硬度、耐磨耗、超高耐衝撃性、超高靭性、超高強度の溶接

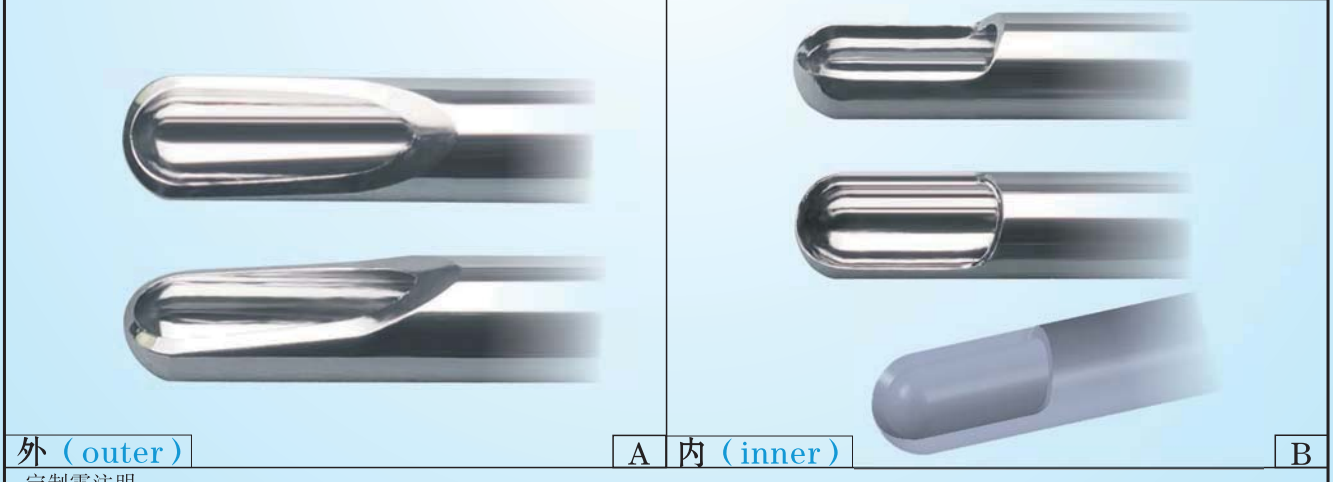

外（outer） A 内（inner） B

定制需注明：
①以上系列规格的总长度均可依要求定制
②以上只图示刨刀头部位置的内外径尺寸(头部刃外径尺寸,可依选择组合及配合要求精研磨至所需的尺寸公差,以超高精密内外刀配合)
③选好齿型（样本没有的齿型需批量才能定制或来图来样咨询）
④注明所需整套的详细的内、外规格、总长度及精研磨的公差要求……

Remarks needed for customization:
1.The overall length of the series specifications above can be customized according to customers' requirement.
2.This only shows the ID & OD of the shaver blade cutting edge position (Cutting edge OD will be according to customers' preferential combination, match up the requirement to finish grind to required tolerance, with ultra-high precision cooperation of inner tubes and outer tubes)
3.Choose the tooth profile. (For tooth profile that is not in our catalog, we can customize according to customers' drawings or samples but only with batch qty)
4. Need to know the detailed specifications of outer tube and inner tube, such as diameter, total length and tolerance requirement of fine grinding.

★.依圖依樣尺寸/公差/要求復合成型加工，可生產極為復雜、精密的柄部形狀。Compound contour machining according to the sizes/ tolerances/requirements of drawings and samples, we can produce extreme complex and accurate holder profile.
図面、サンプル、寸法または公差の要求により複合成型加工を行い、極めて複雑、精密な柄部の形状を生産できる.

醫用工具及配件系列(耳鼻、内窺鏡、關節鏡刨刀)（常規常備齒型）
Medical tools and parts series (Otorhinolaryngologic, endoscopic, arthroscopic shaver blades) (Conventional and Stock Tooth Profiles)
医療器具及び部品シリーズ(耳鼻、内視鏡、関節鏡鉋刃）（通常常備歯型）

（超鋒利刃口&超高防銹（AA)&超高耐磨&超高精密度内外配合）
(Ultra-sharp cutting edge & ultra-high anti-rust (AA) & ultra-high wear -resistant & ultra-high precision cooperation of inner tubes and outer tubes)
(超鋭利刃先&超防錆(AA)&超耐磨耗&超精度内外接合)

材料：高硬度高抗衝擊高韌性超級鏡面不銹鋼ASTMF899(HRC54°~64°系列等級
Material: super mirror stainless steel ASTMF899 with high hardness, high impact and high toughness (HRC54°~64° series)
材質：高硬度高耐衝撃高靭性スーパー仕上げステンレスASTMF899(HRC54°~64°シリーズレベル)

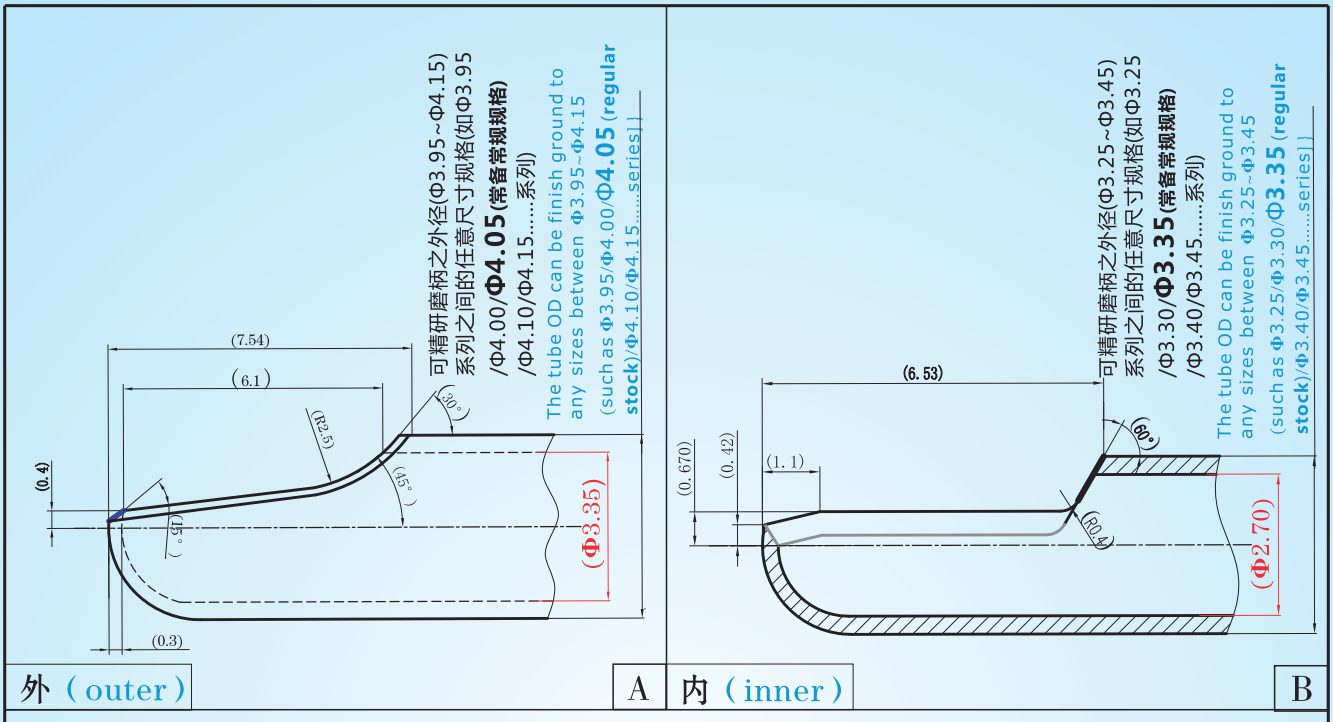

超鋒利刃、超高精密度内外配合、超高防銹，超高硬度、耐磨，超高抗衝擊性能、超高韌性，超高强度之焊接。
Welding with super sharp edge, ultra-high precision internal and external matching, superhigh rust resistance, superhigh hardness, wear resistance, high impact resistance, superhigh toughness and superhigh strength.
超鋭利の刃部、超高精密度の内外嵌め合い、超高防錆、超高硬度、耐磨耗、超高耐衝撃性、超高韧性、超高強度の溶接

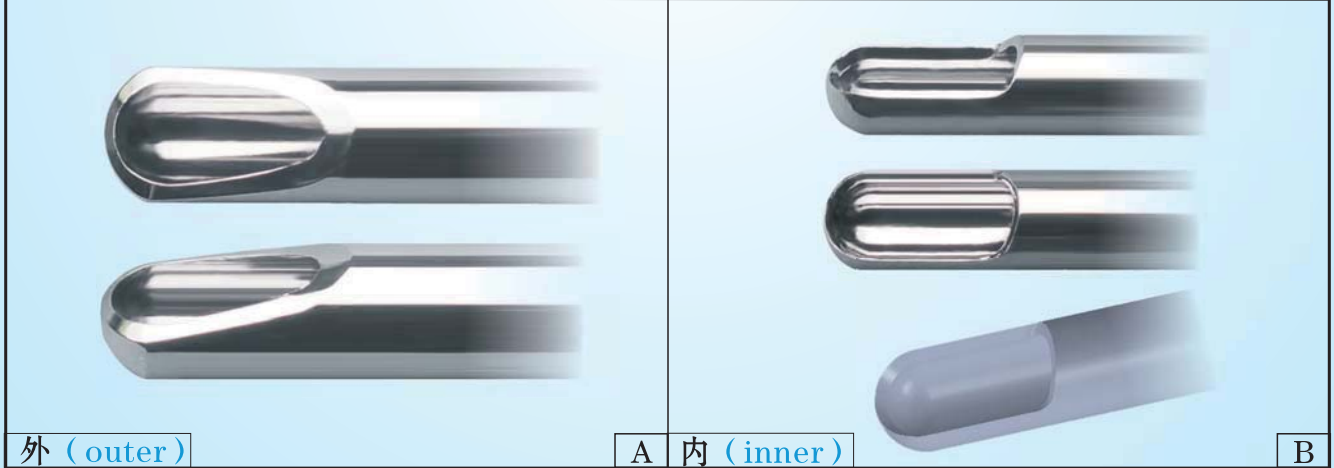

定制需注明：
①以上系列规格的总长度均可依要求定制
②以上只图示刨刀头部位置的内外径尺寸(头部刃外径尺寸,可依选择组合及配合要求精研磨至所需的尺寸公差,以超高精密内外刀配合)
③选好齿型（样本没有的齿型需批量才能定制或来图来样咨询）
④注明所需整套的详细的内、外规格、总长度及精研磨的公差要求……
Remarks needed for customization:
1.The overall length of the series specifications above can be customized according to customers' requirement.
2.This only shows the ID & OD of the shaver blade cutting edge position (Cutting edge OD will be according to customers' preferential combination, match up the requirement to finish grind to required tolerance, with ultra-high precision cooperation of inner tubes and outer tubes)
3.Choose the tooth profile. (For tooth profile that is not in our catalog, we can customize according to customers' drawings or samples but only with batch qty)
4. Need to know the detailed specifications of outer tube and inner tube, such as diameter, total length and tolerance requirement of fine grinding.

★.依圖依樣尺寸/公差/要求復合成型加工，可生產極為復雜、精密的柄部形狀。Compound contour machining according to the sizes/tolerances/requirements of drawings and samples, we can produce extreme complex and accurate holder profile.
図面、サンプル、寸法または公差の要求により複合成型加工を行い、極めて複雑、精密な柄部の形状を生産できる.

醫用工具及配件系列(耳鼻、内窺鏡、關節鏡刨刀)(常規常備齒型)
Medical tools and parts series (Otorhinolaryngologic, endoscopic, arthroscopic shaver blades) (Conventional and Stock Tooth Profiles)
医療器具及び部品シリーズ(耳鼻、内視鏡、関節鏡鉋刃)(通常常備歯型)

(超鋒利刃口&超高防銹(AA)&超高耐磨&超高精密度内外配合)
(Ultra-sharp cutting edge & ultra-high anti-rust (AA) & ultra-high wear -resistant & ultra-high precision cooperation of inner tubes and outer tubes)
(超鋭利刃先&超防錆(AA)&超耐磨耗&超精度内外接合)

材料:高硬度高抗衝擊高韌性超級鏡面不銹鋼ASTMF899(HRC54°~64°系列等級
Material: super mirror stainless steel ASTMF899 with high hardness, high impact and high toughness (HRC54°~64° series)
材質:高硬度高耐衝撃高靭性スーパー仕上げステンレスASTMF899(HRC54°~64°シリーズレベル)

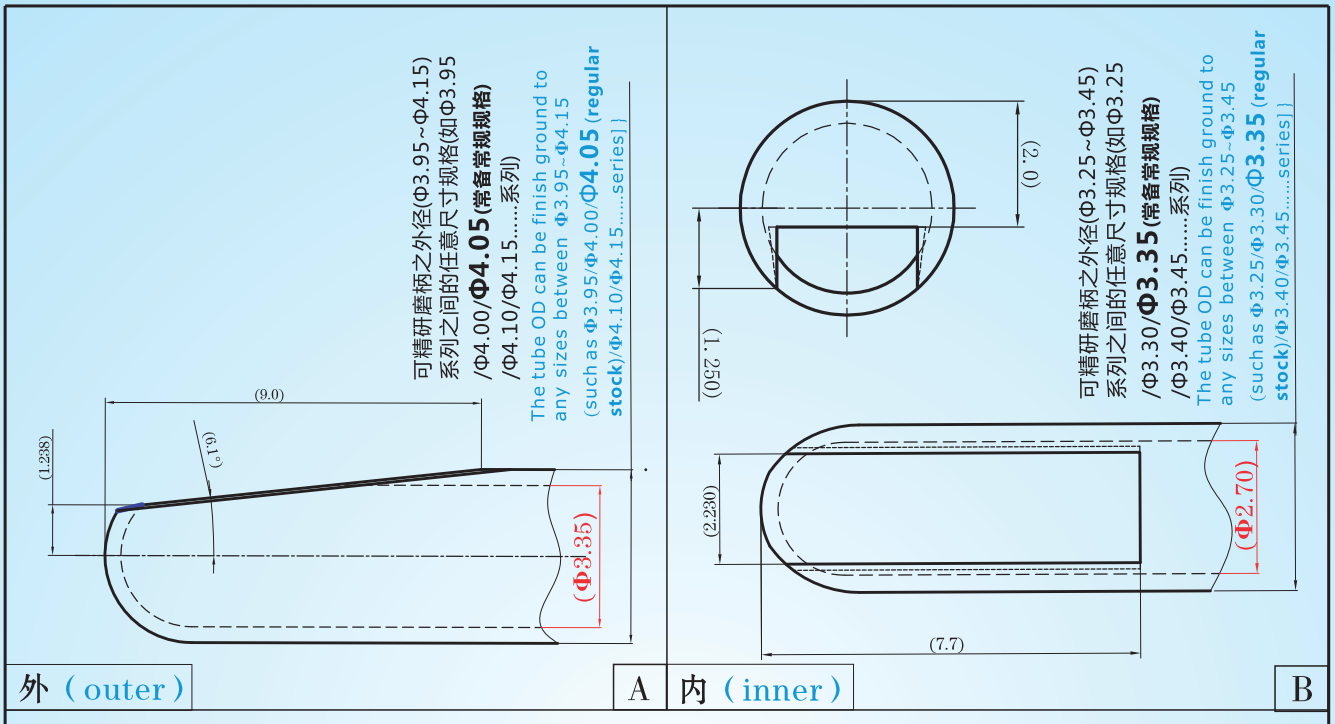

外(outer) A 内(inner) B

超鋒利刃、超高精密度内外配合、超高防銹,超高硬度、耐磨,超高抗衝擊性能、超高韌性,超高强度之焊接。
Welding with super sharp edge, ultra-high precision internal and external matching, superhigh rust resistance, superhigh hardness, wear resistance, high impact resistance, superhigh toughness and superhigh strength.
超鋭利の刃部、超高精密度の内外嵌め合い、超高防錆、超高硬度、耐磨耗、超高耐衝撃性、超高韌性、超高強度の溶接

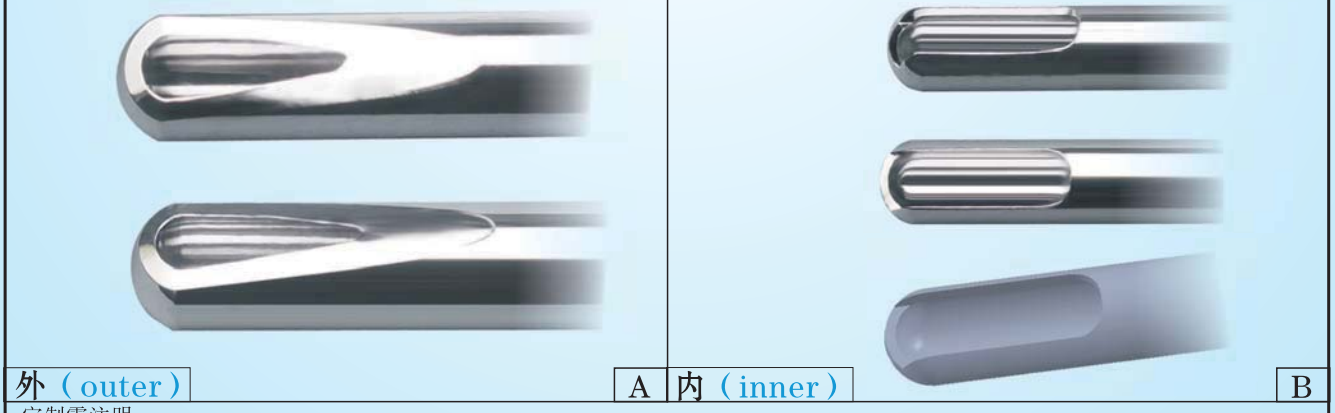

外(outer) A 内(inner) B

定制需注明:
①以上系列规格的总长度均可依要求定制
②以上只图示刨刀头部位置的内外径尺寸(头部刃外径尺寸,可依选择组合及配合要求精研磨至所需的尺寸公差,以超高精密内外刀配合)
③选好齿型(样本没有的齿型需批量才能定制或来图来样咨询)
④注明所需整套的详细的内、外规格、总长度及精研磨的公差要求……
Remarks needed for customization:
1.The overall length of the series specifications above can be customized according to customers' requirement.
2.This only shows the ID & OD of the shaver blade cutting edge position (Cutting edge OD will be according to customers' preferential combination, match up the requirement to finish grind to required tolerance, with ultra-high precision cooperation of inner tubes and outer tubes)
3.Choose the tooth profile. (For tooth profile that is not in our catalog, we can customize according to customers' drawings or samples but only with batch qty)
4. Need to know the detailed specifications of outer tube and inner tube, such as diameter, total length and tolerance requirement of fine grinding.

★.依圖依樣尺寸/公差/要求復合成型加工,可生產極為復雜、精密的柄部形狀。Compound contour machining according to the sizes/tolerances/requirements of drawings and samples, we can produce extreme complex and accurate holder profile.
図面、サンプル、寸法または公差の要求により複合成型加工を行い、極めて複雑、精密な柄部の形状を生産できる.

醫用工具及配件系列(耳鼻、内窺鏡、關節鏡刨刃)(常規常備齒型)
Medical tools and parts series (Otorhinolaryngologic, endoscopic, arthroscopic shaver blades) (Conventional and Stock Tooth Profiles)
医療器具及び部品シリーズ(耳鼻、内視鏡、関節鏡鉋刃)(通常常備歯型)

(超鋒利刃口&超高防銹(AA)&超高耐磨&超高精密度内外配合)
(Ultra-sharp cutting edge & ultra-high anti-rust (AA) & ultra-high wear -resistant & ultra-high precision cooperation of inner tubes and outer tubes)
(超鋭利刃先&超防錆(AA)&超耐磨耗&超精度内外接合)

材料:高硬度高抗衝擊高韌性超級鏡面不銹鋼ASTMF899(HRC54°~64°系列等級
Material: super mirror stainless steel ASTMF899 with high hardness, high impact and high toughness (HRC54°~64° series)
材質:高硬度高耐衝撃高靭性スーパー仕上げステンレスASTMF899(HRC54°~64°シリーズレベル)

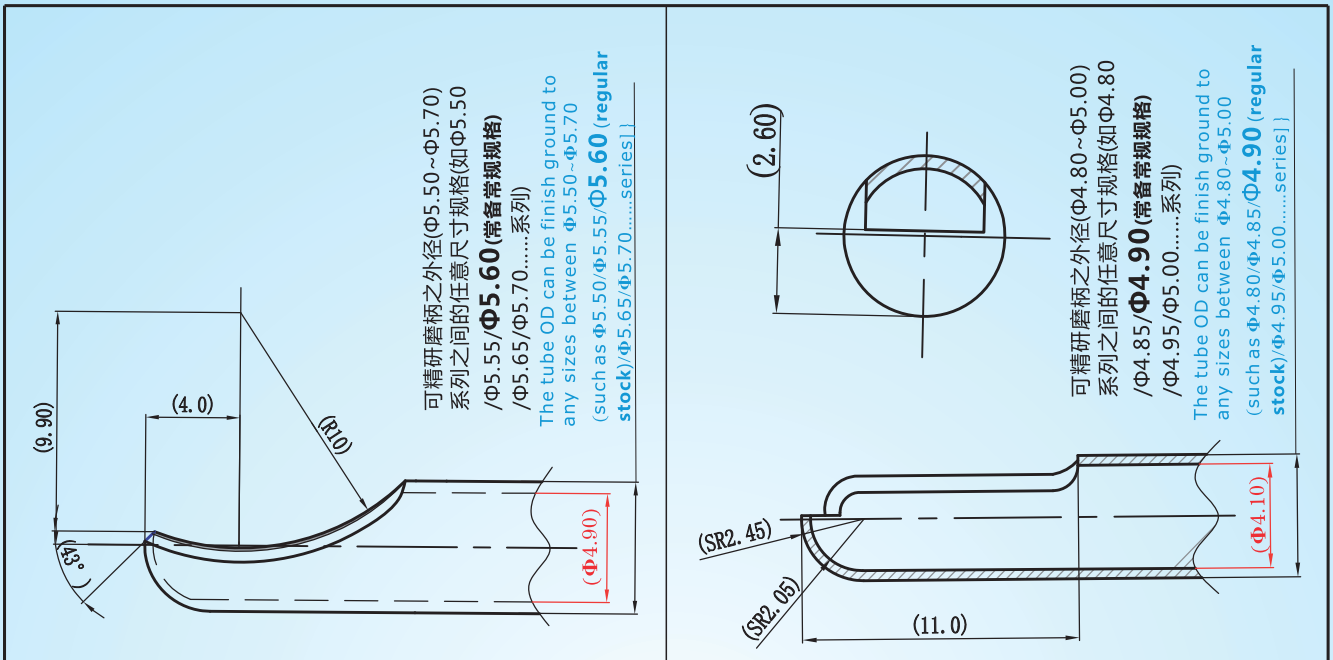

外(outer) A | 内(inner) B

超鋒利刃、超高精密度内外配合、超高防銹,超高硬度、耐磨,超高抗衝擊性能、超高韌性,超高强度之焊接
Welding with super sharp edge, ultra-high precision internal and external matching, superhigh rust resistance, superhigh hardness, wear resistance, high impact resistance, superhigh toughness and superhigh strength.
超鋭利の刃部、超高精密度の内外嵌め合い、超高防錆、超高硬度、耐磨耗、超高耐衝撃性、超高韌性、超高強度の溶接

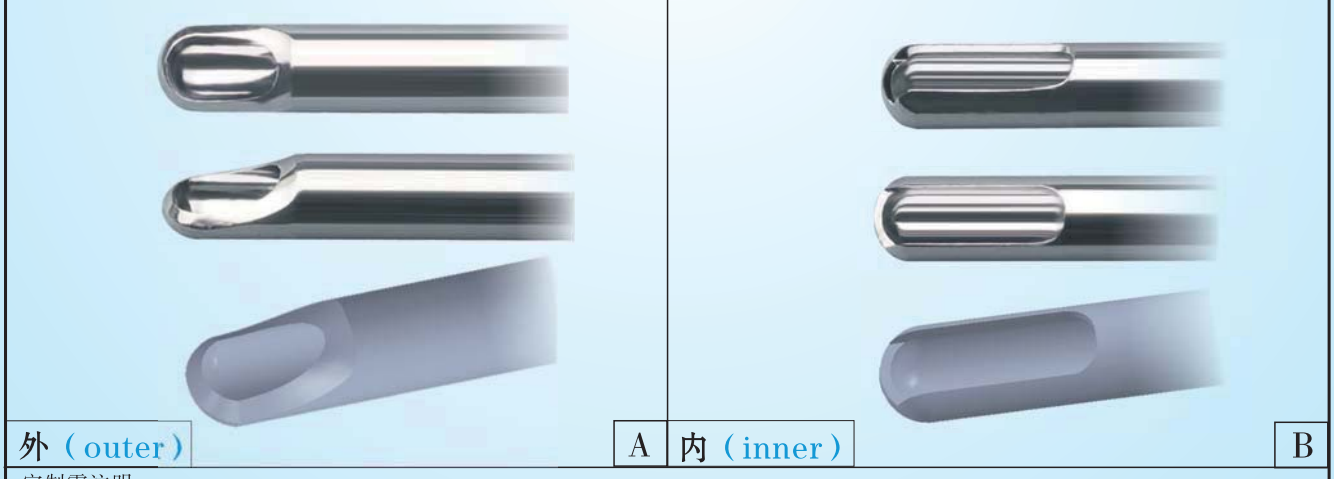

外(outer) A | 内(inner) B

定制需注明:
①以上系列规格的总长度均可依要求定制
②以上只图示刨刀头部位置的内外径尺寸(头部刃外径尺寸,可依选择组合及配合要求精研磨至所需的尺寸公差,以超高精密内外刀配合)
③选好齿型(样本没有的齿型需批量才能定制或来图来样咨询)
④注明所需整套的详细的内、外规格、总长度及精研磨的公差要求……
Remarks needed for customization:
1.The overall length of the series specifications above can be customized according to customers' requirement.
2.This only shows the ID & OD of the shaver blade cutting edge position (Cutting edge OD will be according to customers' preferential combination, match up the requirement to finish grind to required tolerance, with ultra-high precision cooperation of inner tubes and outer tubes)
3.Choose the tooth profile. (For tooth profile that is not in our catalog, we can customize according to customers' drawings or samples but only with batch qty)
4. Need to know the detailed specifications of outer tube and inner tube, such as diameter, total length and tolerance requirement of fine grinding.

★.依圖依樣尺寸/公差/要求復合成型加工,可生產極為復雜、精密的柄部形狀。Compound contour machining according to the sizes/ tolerances/requirements of drawings and samples, we can produce extreme complex and accurate holder profile.
図面、サンプル、寸法または公差の要求により複合成型加工を行い、極めて複雑、精密な柄部の形状を生産できる.

醫用工具及配件系列銑刀(刨刀内刀系列)(常規常備齒型)
Medical tools and parts series burs (Shaver blade Inner tube series)
(Conventional and Stock Tooth Profiles)
医療器具及び部品シリーズミリングカッター(鉋刃内刃シリーズ)(通常常備歯型)

(超高防銹型(AA)&一般防銹型(A)
&硬質合金(AA))
(Super-high anti-rust(AA) & General
anti-rust(A)&Hard alloy(AA))
(超防錆型(AA)&一般防錆型(A)&硬質合金(AA))

材料:高硬度高抗衝擊高韌性超級鏡面不銹鋼ASTMF899(HRC54° ~64° 系列等級
Material: super mirror stainless steel ASTMF899 with high hardness,
high impact and high toughness (HRC54° ~64° series)
材質:高硬度高耐衝撃高靭性スーパー仕上げステンレスASTMF899(HRC54° ~64° シリーズレベル)

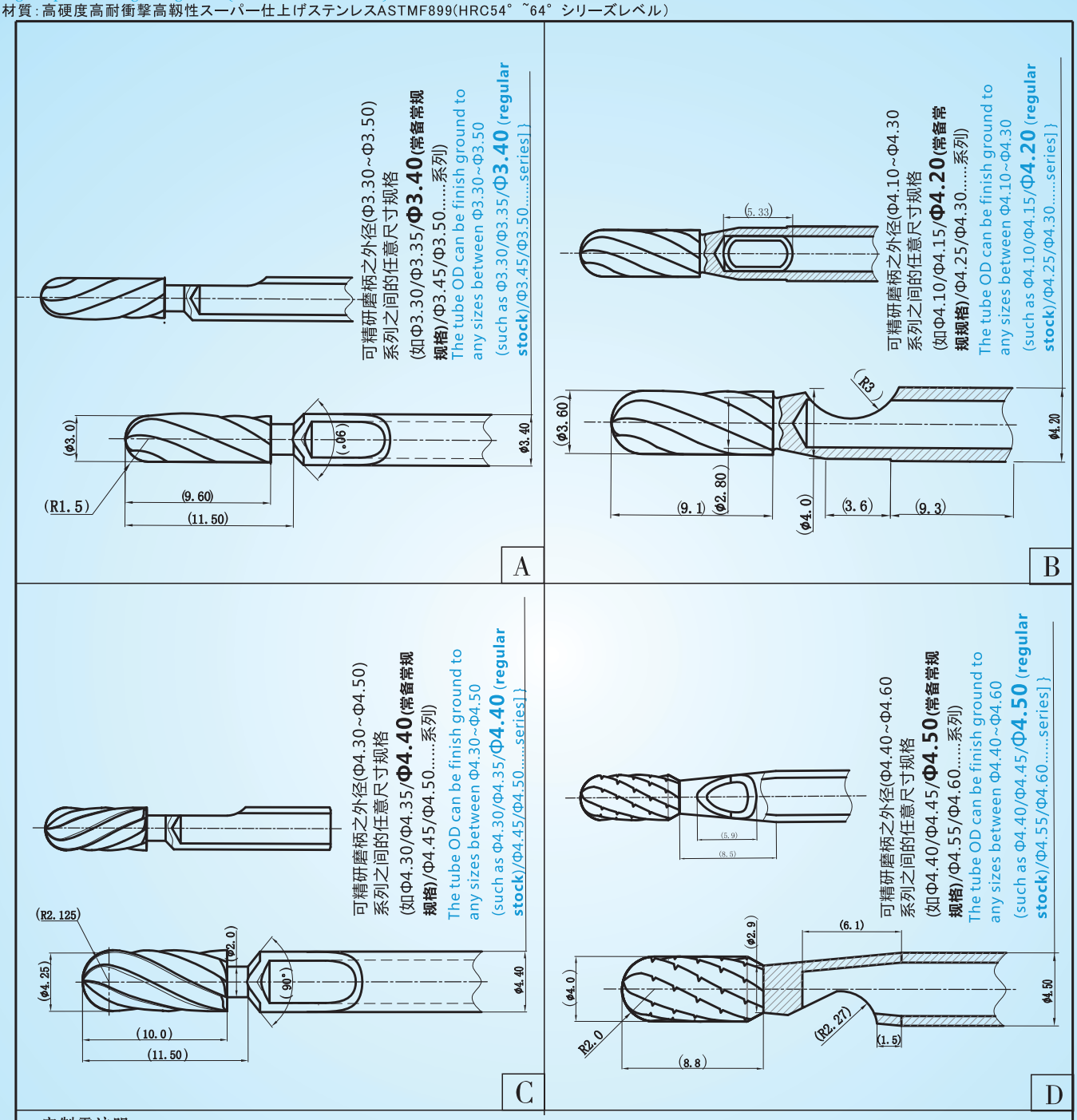

定制需注明:
①以上系列规格总长度均可依要求定制
②可定制超高耐磨型钨钢等(HRA87° ~94° 系列)的头部刃部
③选好齿型(样本没有的齿型需批量才能定制或来图来样咨询)
④注明所需整套的详细的内、外规格、总长度及精研磨的公差要求……
Remarks needed for customization:
1.The overall length of the series specifications above can be customized according to customers' requirement.
2.Ultra-high wear-resistant carbide head edge could be customized(HRA87° ~94° series)
3.Choose the teeth form. (If not the type in our catalog, we can also customize, but require batch quantity.)
4. Need to know the detailed specifications of outer tube and inner tube, such as diameter, total length and tolerance requirement of fine grinding.

★.依圖依樣尺寸/公差/要求復合成型加工,可生產極為復雜、精密的柄部形狀。Compound contour machining according to the sizes/tolerances/requirements of drawings and samples, we can produce extreme complex and accurate holder profile.
図面、サンプル、寸法または公差の要求により複合成型加工を行い、極めて複雑、精密な柄部の形状を生産できる.

醫用工具及配件系列銑刀(刨刀内刀系列)（常規常備齒型）
Medical tools and parts series burs (Shaver blade Inner tube series)
(Conventional and Stock Tooth Profiles)
医療器具及び部品シリーズミリングカッター(鉋刃内刃シリーズ)（通常常備歯型）

(超高防銹型（AA)&一般防銹型(A)
&硬質合金（AA）)
(Super-high anti-rust(AA) & General
anti-rust(A)&Hard alloy(AA))
(超防錆型(AA)&一般防錆型(A)&硬質合金(AA))

材料：高硬度高抗衝擊高韌性超級鏡面不銹鋼ASTMF899(HRC54° ~64° 系列等級
Material: super mirror stainless steel ASTMF899 with high hardness,
high impact and high toughness (HRC54° ~64° series)
材質：高硬度高耐衝撃高靭性スーパー仕上げステンレスASTMF899(HRC54° ~64° シリーズレベル)

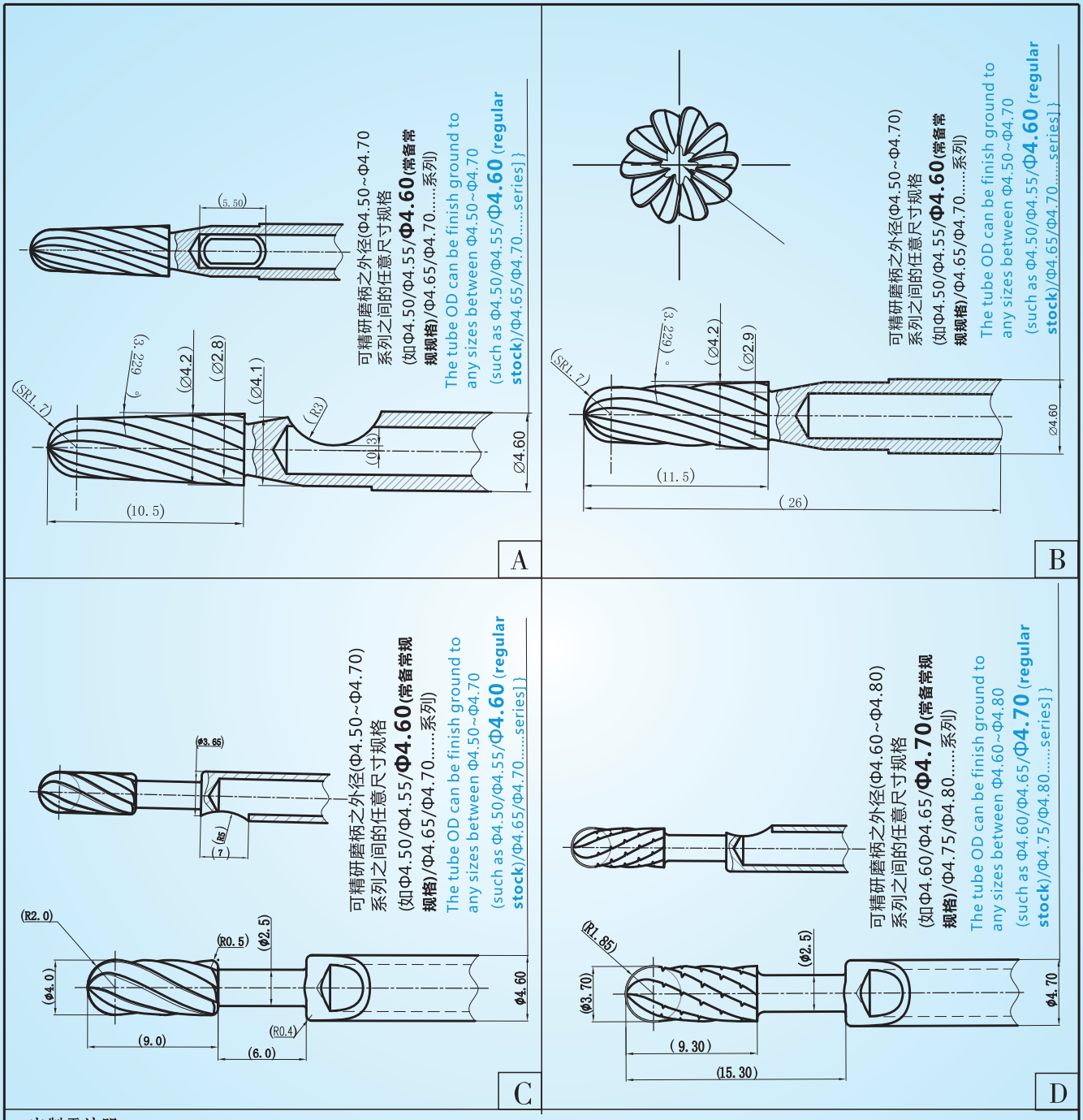

定制需注明：
①以上系列规格总长度均可依要求定制
②可定制超高耐磨型钨钢等(HRA87° ~94° 系列)的头部刃部
③选好齿型（样本没有的齿型需批量才能定制或来图来样咨询）
④注明所需整套的详细的内、外规格、总长度及精研磨的公差要求……
Remarks needed for customization:
1.The overall length of the series specifications above can be customized according to customers' requirement.
2.Ultra-high wear-resistant carbide head edge could be customized(HRA87° ~94° series)
3.Choose the teeth form. (If not the type in our catalog, we can also customize, but require batch quantity.)
4. Need to know the detailed specifications of outer tube and inner tube, such as diameter, total length and tolerance requirement of fine grinding.

★.依圖依樣尺寸/公差/要求復合成型加工，可生產極為復雜、精密的柄部形狀。Compound contour machining according to the sizes/tolerances/requirements of drawings and samples, we can produce extreme complex and accurate holder profile.
図面、サンプル、寸法または公差の要求により複合成型加工を行い、極めて複雑、精密な柄部の形状を生産できる.

醫用工具及配件系列銑刀(刨刀内刀系列)（常規常備齒型）
Medical tools and parts series burs (Shaver blade Inner tube series)
(Conventional and Stock Tooth Profiles)
医療器具及び部品シリーズミリングカッター(鉋刃内刃シリーズ)（通常常備歯型）

(超高防銹型（AA)&一般防銹型(A)
&硬質合金（AA）)
(Super-high anti-rust(AA) & General
anti-rust(A)&Hard alloy(AA))
(超防錆型(AA)&一般防錆型(A)&硬質合金(AA))

材料：高硬度高抗衝擊高韌性超級鏡面不銹鋼ASTMF899(HRC54° ~64° 系列等級
Material: super mirror stainless steel ASTMF899 with high hardness,
high impact and high toughness (HRC54° ~64° series)
材質：高硬度高耐衝撃高靭性スーパー仕上げステンレスASTMF899(HRC54° ~64° シリーズレベル)

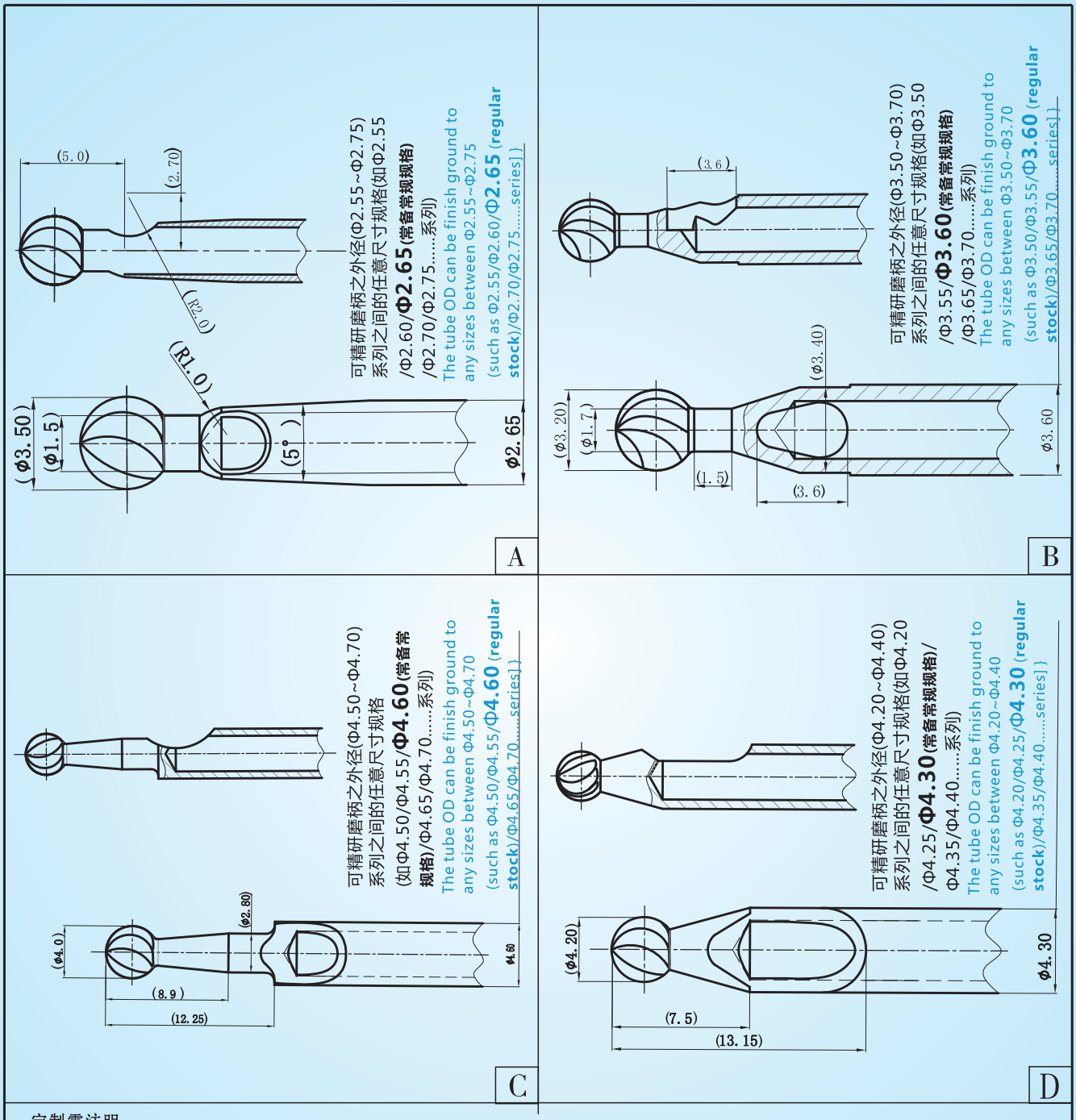

定制需注明：
①以上系列规格总长度均可依要求定制
②可定制超高耐磨型钨钢等(HRA87° ~94° 系列)的头部刃部
③选好齿型（样本没有的齿型需批量才能定制或来图来样咨询）
④ 注明所需整套的详细的内、外规格、总长度及精研磨的公差要求……

Remarks needed for customization:
1.The overall length of the series specifications above can be customized according to customers' requirement.
2.Ultra-high wear-resistant carbide head edge could be customized(HRA87° ~94° series)
3.Choose the teeth form. (If not the type in our catalog, we can also customize, but require batch quantity.)
4. Need to know the detailed specifications of outer tube and inner tube, such as diameter, total length and tolerance requirement of fine grinding.

★.依圖依樣尺寸/公差/要求復合成型加工，可生產極為復雜、精密的柄部形狀。Compound contour machining according to the sizes/tolerances/requirements of drawings and samples, we can produce extreme complex and accurate holder profile.
図面、サンプル、寸法または公差の要求により複合成型加工を行い、極めて複雑、精密な柄部の形状を生産できる.

醫用工具及配件系列銑刀(刨刀内刀系列)(鍍砂型/SDC/CBNC)（常規常備齒型）
Medical tools and parts series (Shaver blade Inner tube series)
(Plating / SDC / CBNC)(Conventional and Stock Tooth Profiles)
医療器具及び部品シリーズミリングカッター(鉋刃内刃シリーズ)
(砂メッキ型/SDC/CBNC)(通常常備歯型)

（一般耐磨鋭利型(A)&高耐磨高鋭利型(AA)）
(General wear-resistant sharp type(A)&
High wear-resistant high sharp type(AA))
(一般耐磨耗鋭利型(A)&高耐磨耗高鋭利型(AA))

材料：高硬度高抗衝擊高韌性超級鏡面不銹鋼ASTMF899(HRC54° ~64° 系列等級
Material: super mirror stainless steel ASTMF899 with high hardness,
high impact and high toughness (HRC54° ~64° series)
材質：高硬度高耐衝撃高靭性スーパー仕上げステンレスASTMF899(HRC54° ~64° シリーズレベル)

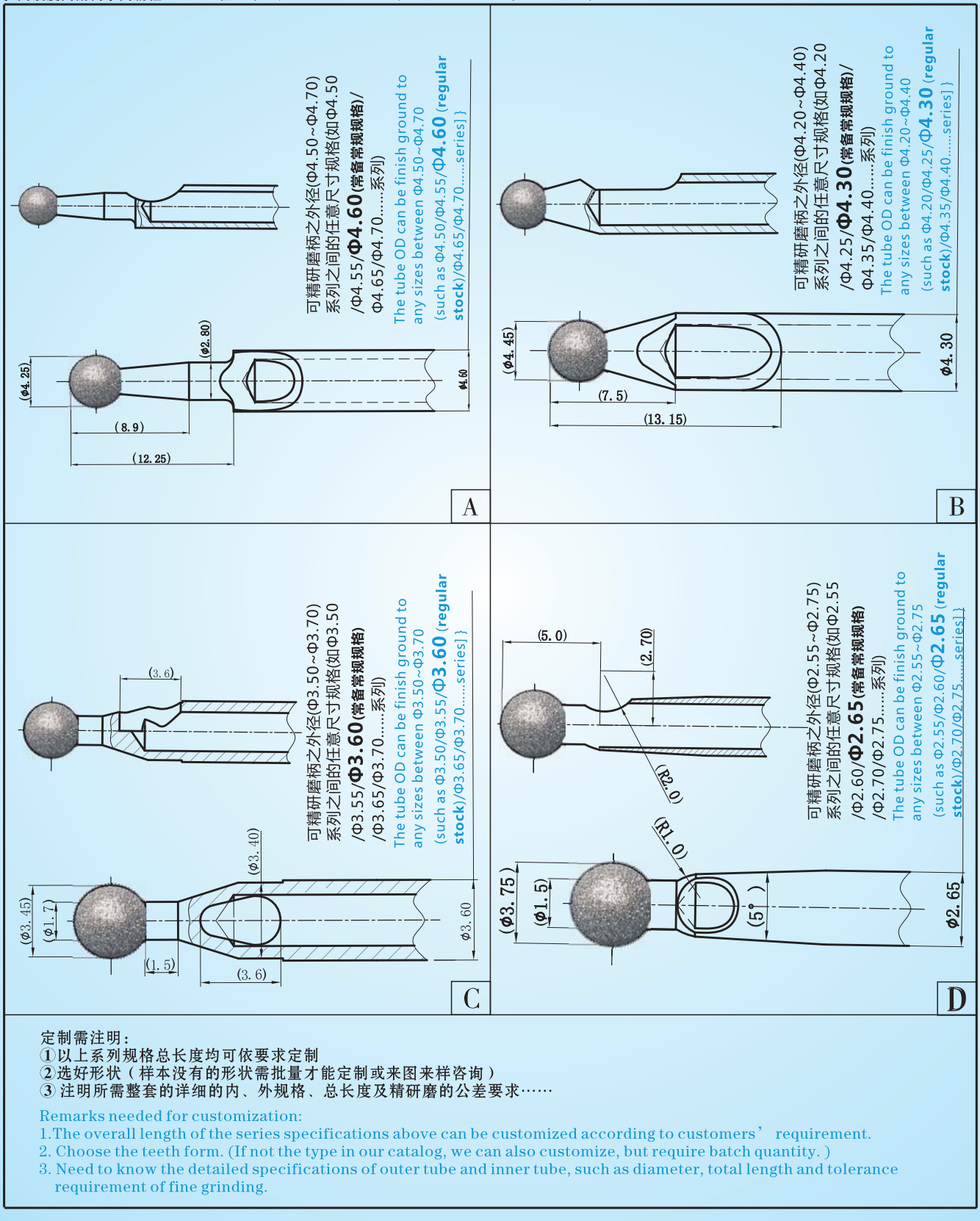

定制需注明：
①以上系列规格总长度均可依要求定制
②选好形状（样本没有的形状需批量才能定制或来图来样咨询）
③注明所需整套的详细的内、外规格、总长度及精研磨的公差要求……

Remarks needed for customization:
1.The overall length of the series specifications above can be customized according to customers' requirement.
2. Choose the teeth form. (If not the type in our catalog, we can also customize, but require batch quantity.)
3. Need to know the detailed specifications of outer tube and inner tube, such as diameter, total length and tolerance requirement of fine grinding.

★.依圖依樣尺寸/公差/要求復合成型加工，可生產極為復雜、精密的柄部形狀。Compound contour machining according to the sizes/tolerances/requirements of drawings and samples, we can produce extreme complex and accurate holder profile.
図面、サンプル、寸法または公差の要求により複合成型加工を行い、極めて複雑、精密な柄部の形状を生産できる.

醫用工具及配件系列銑刀(刨刀内刀系列)(鍍砂型/SDC/CBNC)（常規常備齒型）
Medical tools and parts series (Shaver blade Inner tube series)
(Plating / SDC / CBNC)(Conventional and Stock Tooth Profiles)
医療器具及び部品シリーズミリングカッター(鉋刃内刃シリーズ)
(砂メッキ型/SDC/CBNC)(通常常備歯型)

材料：高硬度高抗衝擊高韌性超級鏡面不銹鋼ASTMF899(HRC54° ~64° 系列等級
Material: super mirror stainless steel ASTMF899 with high hardness, high impact and high toughness (HRC54° ~64° series)
材質：高硬度高耐衝撃高靭性スーパー仕上げステンレスASTMF899(HRC54° ~64° シリーズレベル)

（一般耐磨鋭利型(A)&高耐磨高鋭利型(AA))
(General wear-resistant sharp type(A)& High wear-resistant high sharp type(AA))
(一般耐磨耗鋭利型(A)&高耐磨耗高鋭利型(AA))

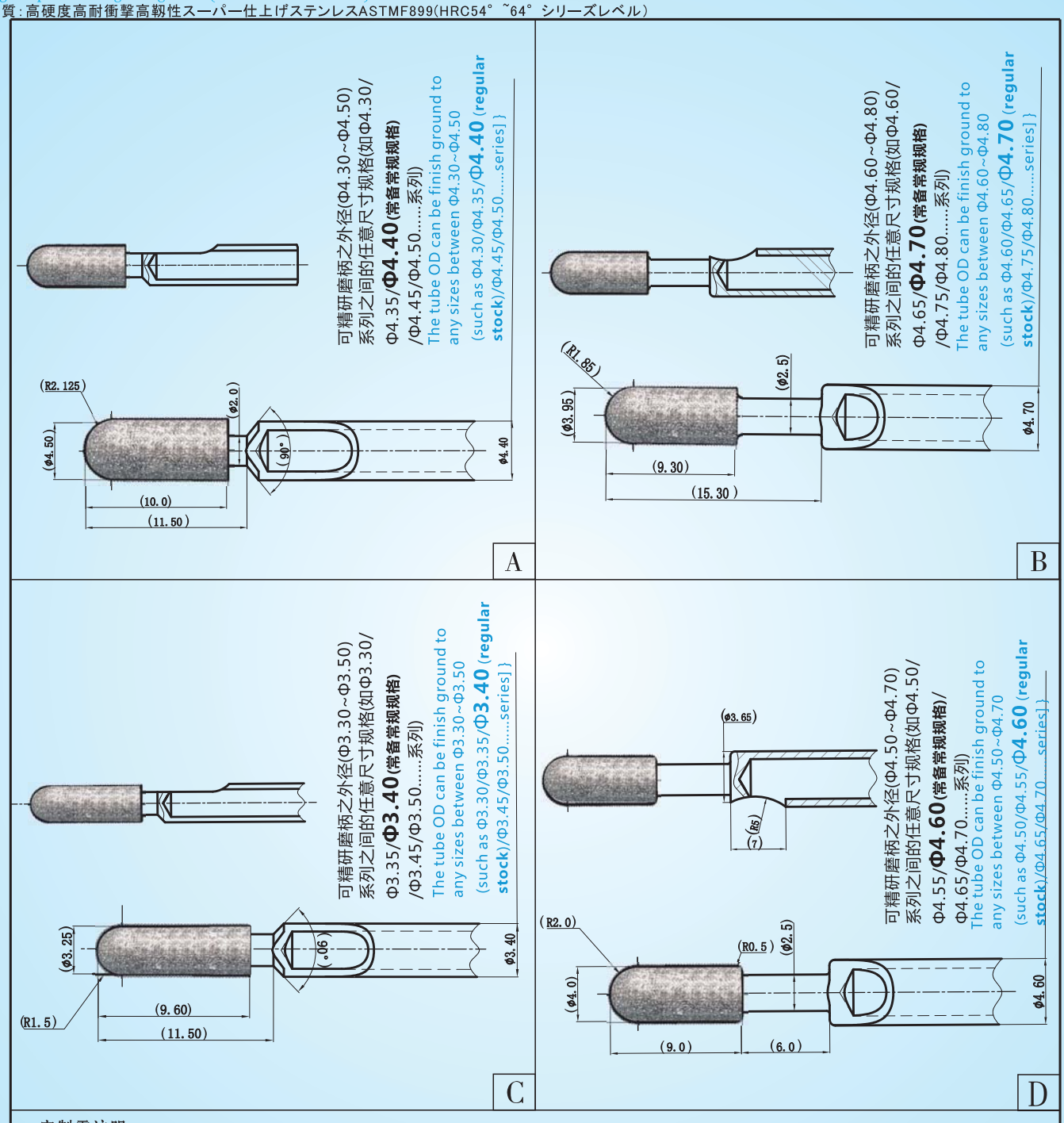

定制需注明：
①以上系列规格总长度均可依要求定制
②选好形状（样本没有的形状需批量才能定制或来图来样咨询）
③注明所需整套的详细的内、外规格、总长度及精研磨的公差要求……

Remarks needed for customization:
1.The overall length of the series specifications above can be customized according to customers' requirement.
2. Choose the teeth form. (If not the type in our catalog, we can also customize, but require batch quantity.)
3. Need to know the detailed specifications of outer tube and inner tube, such as diameter, total length and tolerance requirement of fine grinding.

★.依圖依樣尺寸/公差/要求復合成型加工，可生產極為復雜、精密的柄部形狀。Compound contour machining according to the sizes/tolerances/requirements of drawings and samples, we can produce extreme complex and accurate holder profile.
図面、サンプル、寸法または公差の要求により複合成型加工を行い、極めて複雑、精密な柄部の形状を生産できる.

醫用工具及配件系列銑刀(刨刀内刀系列)(鍍砂型/SDC/CBNC)（常規常備齒型）
Medical tools and parts series (Shaver blade Inner tube series)
(Plating / SDC / CBNC)(Conventional and Stock Tooth Profiles)
医療器具及び部品シリーズミリングカッター(鉋刃内刃シリーズ)
(砂メッキ型/SDC/CBNC)(通常常備歯型)

(一般耐磨鋭利型(A)&高耐磨高鋭利型(AA))
(General wear-resistant sharp type(A)&
High wear-resistant high sharp type(AA))
(一般耐磨耗鋭利型(A)&高耐磨耗高鋭利型(AA))

材料：高硬度高抗衝擊高韌性超級鏡面不銹鋼ASTMF899(HRC54° ~64° 系列等級
Material: super mirror stainless steel ASTMF899 with high hardness,
high impact and high toughness (HRC54° ~64° series)
材質：高硬度高耐衝撃高靭性スーパー仕上げステンレスASTMF899(HRC54° ~64° シリーズレベル)

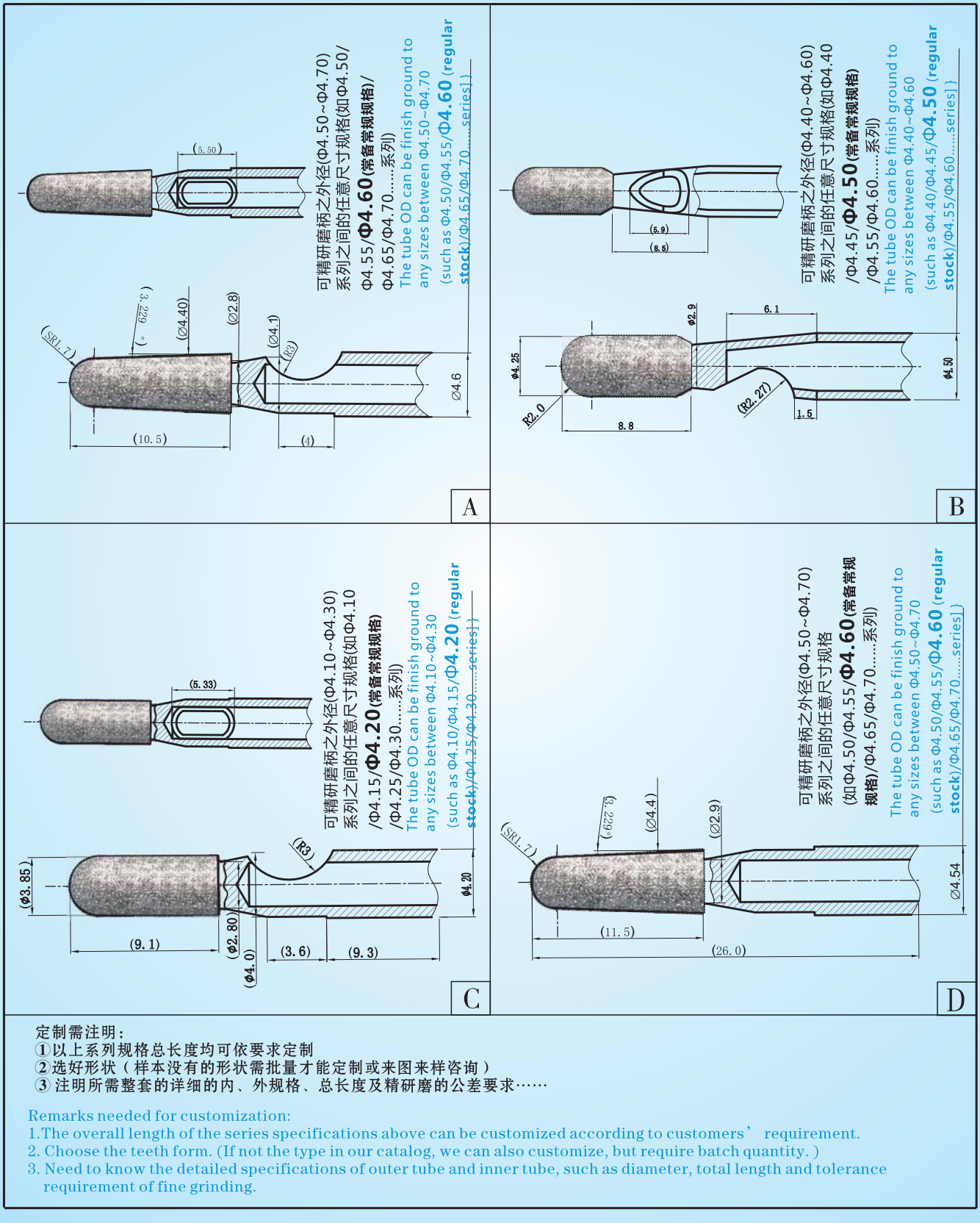

定制需注明：
①以上系列规格总长度均可依要求定制
②选好形状（样本没有的形状需批量才能定制或来图来样咨询）
③注明所需整套的详细的内、外规格、总长度及精研磨的公差要求……

Remarks needed for customization:
1.The overall length of the series specifications above can be customized according to customers' requirement.
2. Choose the teeth form. (If not the type in our catalog, we can also customize, but require batch quantity.)
3. Need to know the detailed specifications of outer tube and inner tube, such as diameter, total length and tolerance requirement of fine grinding.

★.依圖依樣尺寸/公差/要求復合成型加工，可生產極為復雜、精密的柄部形狀。Compound contour machining according to the sizes/tolerances/requirements of drawings and samples, we can produce extreme complex and accurate holder profile.
図面、サンプル、寸法または公差の要求により複合成型加工を行い、極めて複雑、精密な柄部の形状を生産できる.