

修正、校正
Amendment, correction

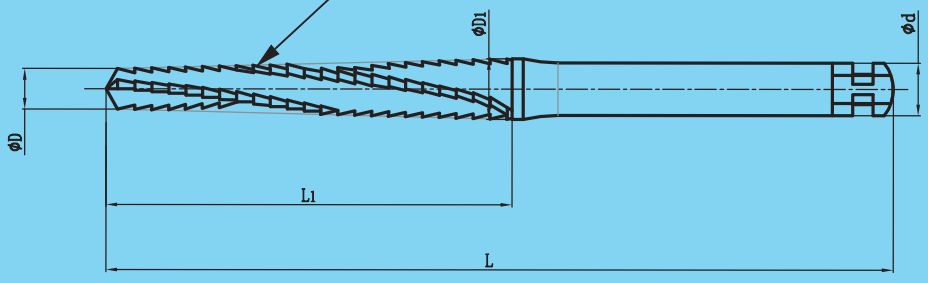

可加工任意齒間距、齒數、刃數、刃長、
錐度角度、鑽尖方式、鑽尖角度……
等側切鑽方式

We can process any pitch, number of teeth, number of blades, length of cut, angle of taper, mode of drill tip, angle of drill tip, etc.



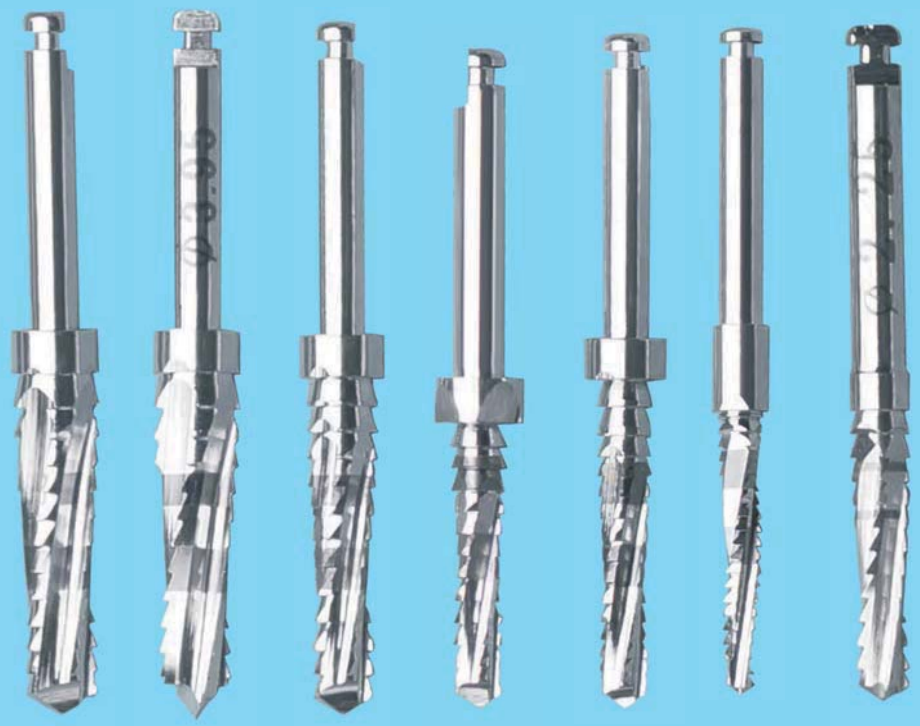

※必要可帶穿透&不穿透，不同等級加工的中空、空芯內孔加工。
With or without penetration, hollow & hollow core inner hole process with different grades.
必要に応じて、貫通付き&貫通なし、各レベル加工での中空、中空内穴加工。

★可超硬、超精研磨，任意的柄部類型、芯厚、容屑槽寬度、刃背方式、鑽尖方式、內冷却孔方式、刃部結構、刃口角度、刃口鋒利程度之要求，及高可至±0.003mm（3μm）的尺寸公差要求 We can produce with super hard and super finish grinding and satisfy your requirement of any type of shank, web thickness, width of chip flute, land, drill tip,inner cooling hole, structure of cutting edge, angle of cutting edge, degree of sharpness of cutting edge, and the dimension tolerance can be up to ±0.003mm（3μm）



修正、校正
Amendment, correction

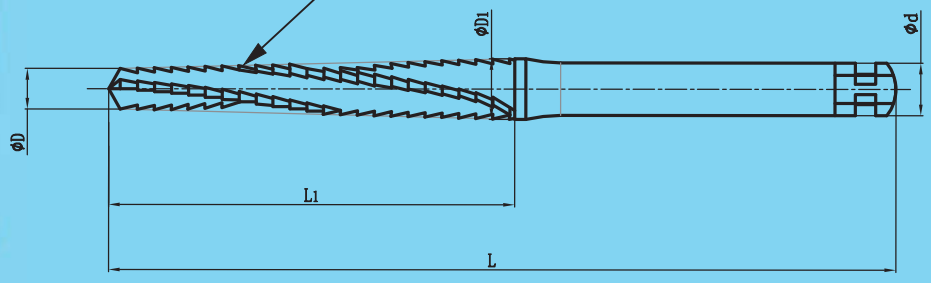

部分尺寸 some size

	刃徑ΦD Diameter	1.7	1.8	1.8	1.8
	刃長L1 Length of cut	17	15.5	18	18
	柄徑Φd Shank Dia.	2.35	2.35	2.35	2.35
	總長L Overall length	32	31	33	34.9
	刃數Z No. of flute	3	3	3	3







※必要可帶穿透&不穿透，不同等級加工的中空、空芯内孔加工。
With or without penetration, hollow & hollow core inner hole process with different grades.
必要に応じて、貫通付き&貫通なし、各レベル加工での中空、中空内穴加工。

★可超硬、超精研磨，任意的柄部類型，芯厚，容屑槽寬度，刃背方式，鑽尖方式，内冷却孔方式，刃部結構，刃口角度，刃口鋒利程度之要求，及高可至±0.003mm（3μm）的尺寸公差要求 We can produce with super hard and super finish grinding and satisfy your requirement of any type of shank, web thickness, width of chip flute, land, drill tip,inner cooling hole, structure of cutting edge, angle of cutting edge, degree of sharpness of cutting edge, and the dimension tolerance can be up to ±0.003mm（3μm）

★、可以組合不同的刃徑形式、形狀、精研磨成型。
★、We can combine various cutting edge diameter types, shapes and fine grind to mold.

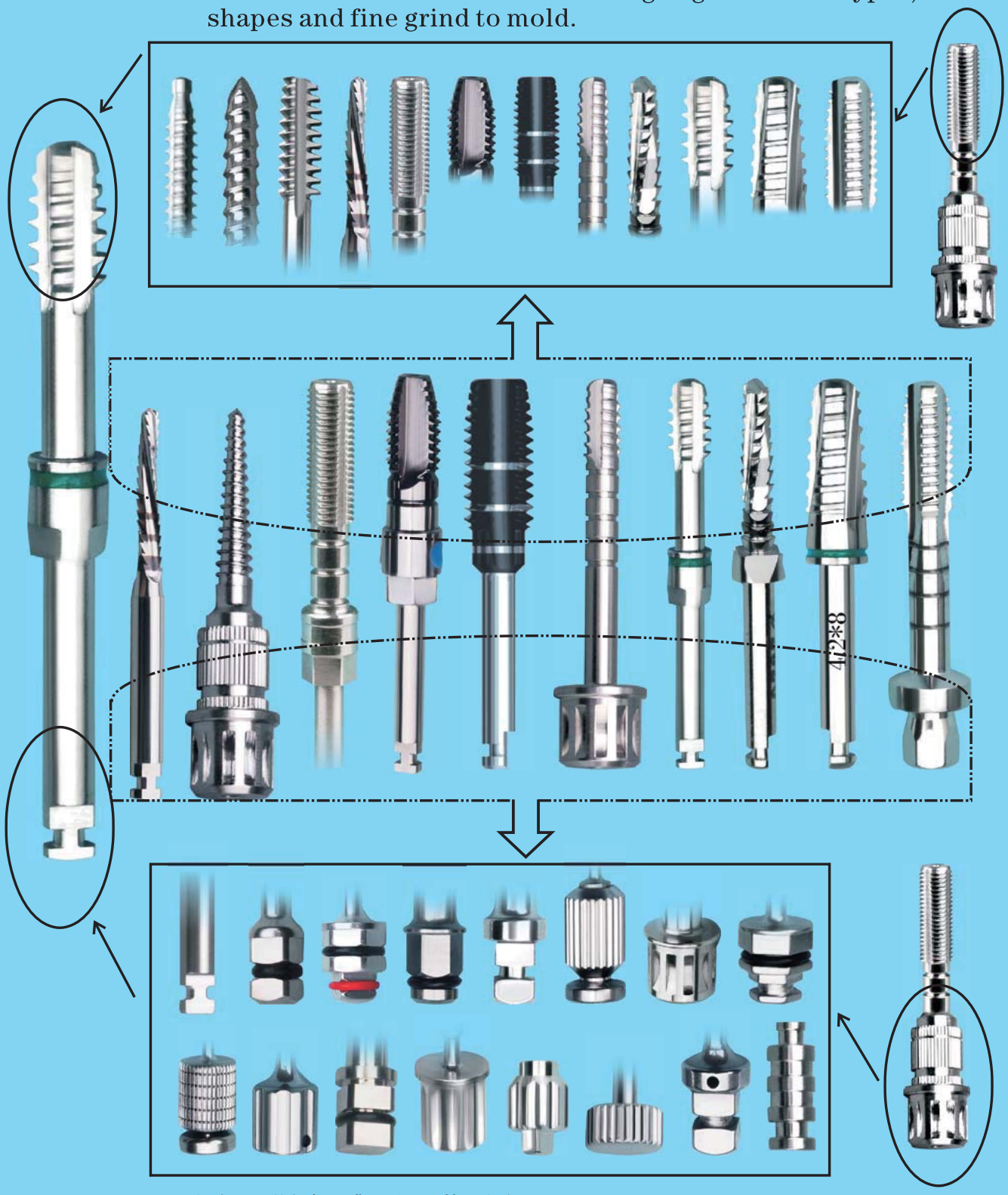

★、可以組合不同的柄部形式、形狀、精研磨成型。
★、可依用户的需求，設計，樣品、CAD圖/3D圖加工研磨出任意形狀的産品。
★、We can combine various shank types, shapes and fine grind to mold.
★、We can produce and grind tools of any shapes according to customers' designs, samples and CAD drawings/3D drawings.

※必要可帶穿透&不穿透，不同等級加工的中空、空芯内孔加工。
With or without penetration, hollow & hollow core inner hole process with different grades.
必要に応じて、貫通付き&貫通なし、各レベル加工での中空、中空内穴加工。

★、機用絲錐結構方式:

可爲2刃/3刃/4刃的螺旋刃,以漸進式、分散攻入的切削力方式
(常規螺旋角爲10° ~12°)

Machine Tap Structure:

It can be a 2-flute/3-flut/4-flut spiral edge with progressive and dispersive cutting force(conventional helix angle is 10° ~12°)



★、任意牙形(螺紋)的熱處理後的超硬、超精研磨 (可带内冷却孔)
★、Super-hard and super finish grinding for any thread form (thread) after heat treament (it can have inner cooling hole)

★、可以任何柄部形狀與刃部形狀、尺寸、公差的組合成型加工。
★、We can do combination profile processing for products with any shape of shank, cutting edge, dimension and tolerance.

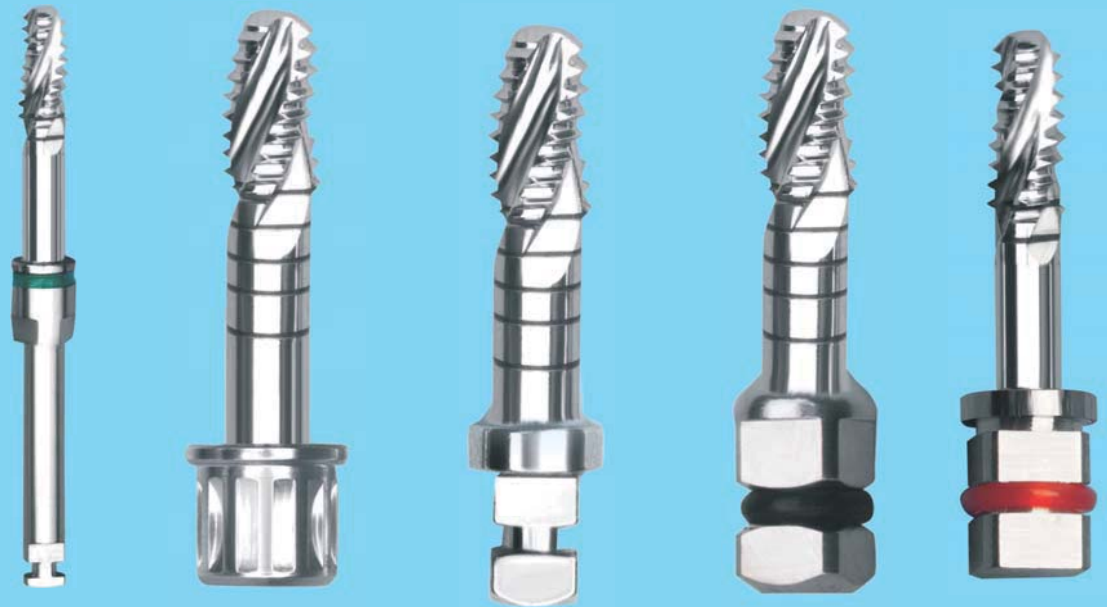

※必要可帶穿透&不穿透,不同等級加工的中空、空芯内孔加工。
With or without penetration, hollow & hollow core inner hole process with different grades.
必要に応じて、貫通付き&貫通なし、各レベル加工での中空、中空内穴加工。

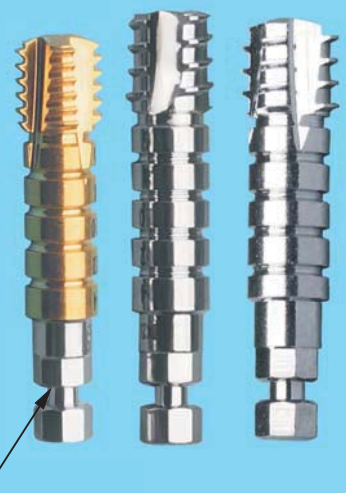

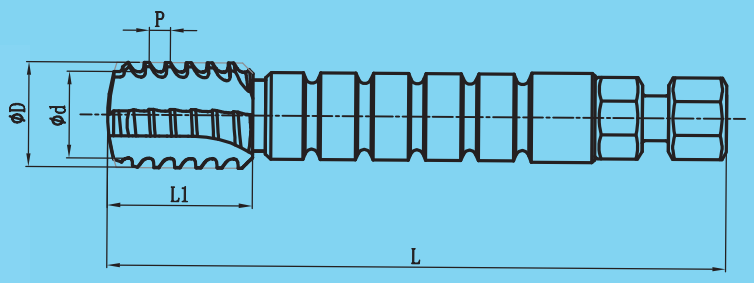

可帶橡膠圈或可定制不同顏色的
高耐磨PEEK,PPSU扁成型
（非純圓圈類）的高端卡圈。
we can use different material
and color, can also customize
high wear-resistant PEEK/PPSU
flat forming(not pure circle type)
high-end ring of different colors

部分尺寸(AA) some size



外徑ΦD Diameter	3.3	4.0	4.0	4.8	4.8
刃長L1 Length of cut	5.5	5.5	5.5	5.5	5.5
內徑Φd Shank Dia.	2.6	3.3	3.3	4.1	4.1
總長L Overall length	23.0	23.0	23.0	23.0	23.0
齒間距P space width	0.8	0.8	1.25	0.8	1.25

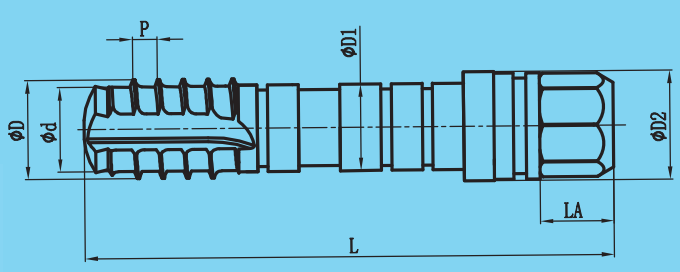

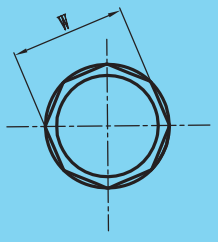



帶鋼圈
with steel ring

部分尺寸(AA) some size



外徑ΦD Diameter	3.3	4.1
內徑Φd Shank Dia.	2.6	3.3
總長L Overall length	1.0	1.25
寬度W wide	3.0	3.0
齒間距P space width	23.0	23.0



※必要可帶穿透&不穿透，不同等級加工的中空、空芯内孔加工。
With or without penetration, hollow & hollow core inner hole process with different grades.
必要に応じて、貫通付き&貫通なし、各レベル加工での中空、中空内穴加工。



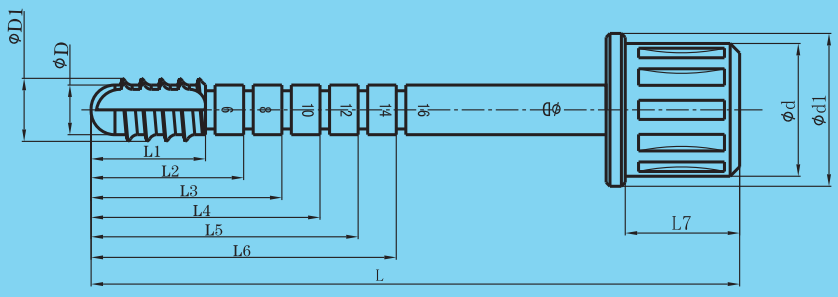

部分尺寸(AA):some size (AA)



刃徑ΦD1 Diameter	3.3	4.1	4.8	3.3	4.1	4.8
刃長L1 Length of cut 刃の長さ	8	6	6	6	6	6
柄徑ΦD Shank Dia.	2.6	3.4	4.1	2.8	3.5	4.2
總長L Overall length 総長さ	26	26	26	34	34	34

★、任意牙形（螺紋）的熱處理後的超硬、超精研磨 （可带内冷却孔）
★、Super-hard and super finish grinding for any thread form (thread) after heat treament (it can have inner cooling hole)

★、可以任何柄部形狀與刃部形狀、尺寸、公差的組合成型加工。
★、We can do combination profile processing for products with any shape of shank, cutting edge, dimension and tolerance.

★、機用絲錐結構方式:
可爲2刃/3刃/4刃的螺旋刃,以漸進式、分散攻入的切削力方式
（常規螺旋角爲10° ~12° ）

Machine Tap Structure:
It can be a 2-flute/3-flut/4-flut spiral edge with progressive and dispersive cutting force(conventional helix angle is 10° ~12°)

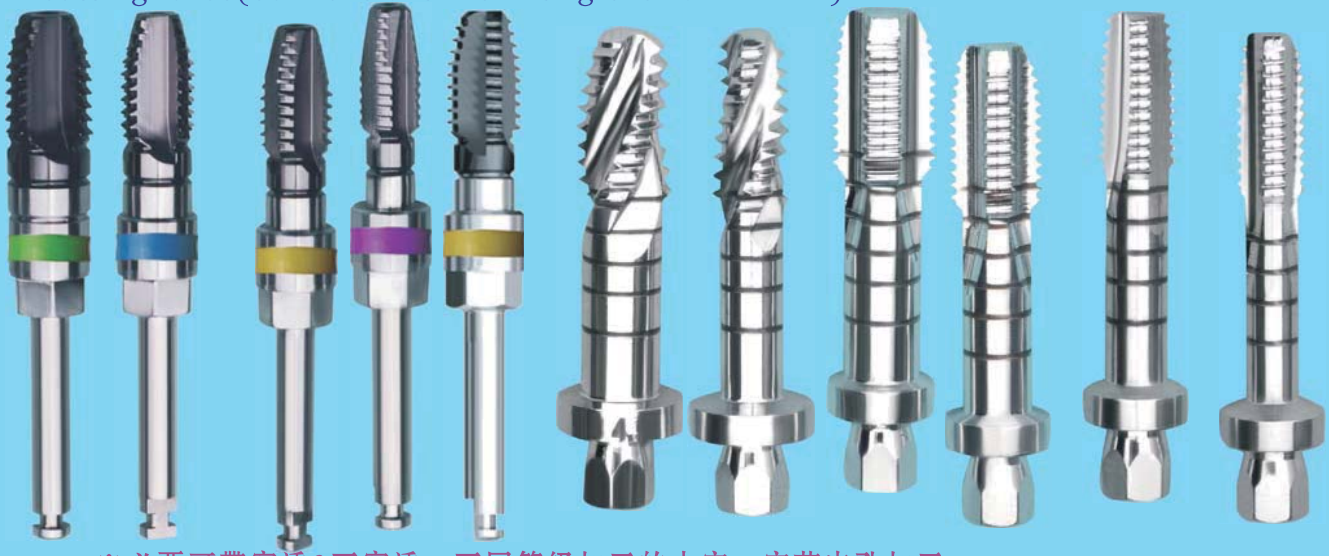

※必要可帶穿透&不穿透，不同等級加工的中空、空芯内孔加工。
With or without penetration, hollow & hollow core inner hole process with different grades.
必要に応じて、貫通付き&貫通なし、各レベル加工での中空、中空内穴加工。



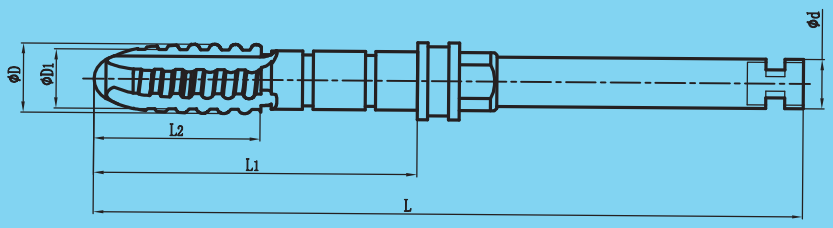

部分尺寸(AA)some size

	刃徑ΦD Diameter	3.5	4.3	5.0
	刃徑ΦD1 Diameter	2.75	3.5	4.2
	刃長L1 Length of cut	15.5	15.5	15.5
	柄徑Φd Shank Dia.	2.35	2.35	2.35
	總長L Overall length	33.8	33.8	33.8
	刃數Z No. of flute	3	3	3

材料:
①超高防銹高耐磨不銹鋼系列(AA)(HRC54° ±2° 斷面)(常備常規)
②一般防銹高耐磨不銹鋼系列(A)(HRC45° ~64° 斷面系列)

Material:
①Super-high anti-rust high wear resistance stainless steel series(AA)(HRC54° ±2° section)(regularly stock)
②General anti-rust high wear resistance stainless steel series(A)(HRC45° ~64° section series)

材質
①超防錆高耐磨耗ステンレスシリーズ(AA)(HRC54° ±2°)(常備通常)
②一般防錆高耐磨耗ステンレスシリーズ(A)(HRC45° ~64° シリーズ)

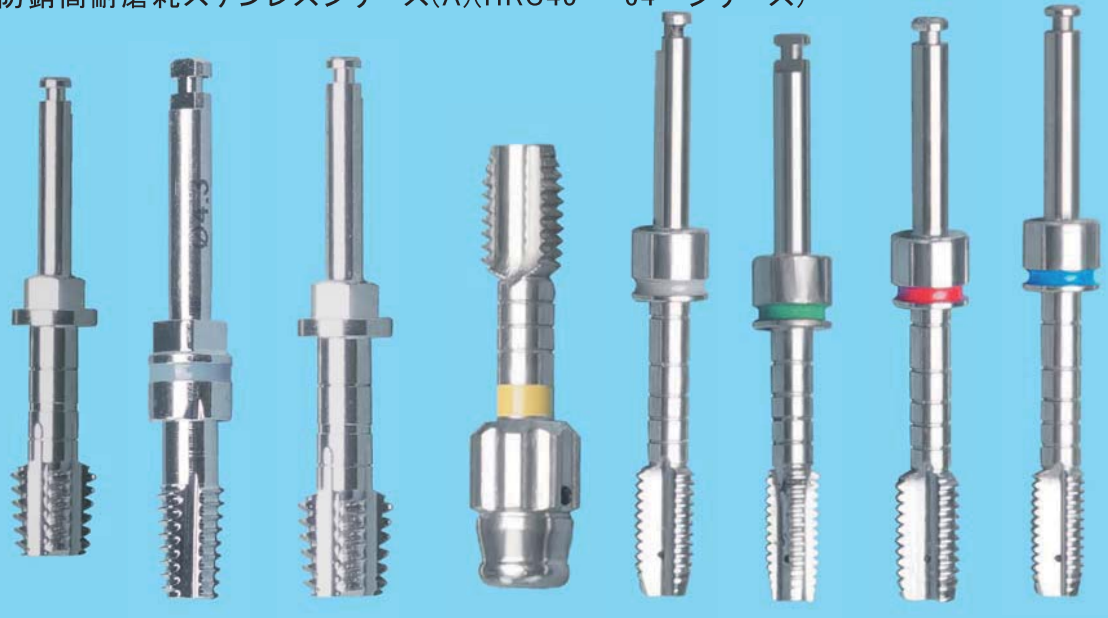

※必要可帶穿透&不穿透，不同等級加工的中空、空芯内孔加工。
With or without penetration, hollow & hollow core inner hole process with different grades.
必要に応じて、貫通付き&貫通なし、各レベル加工での中空、中空内穴加工。



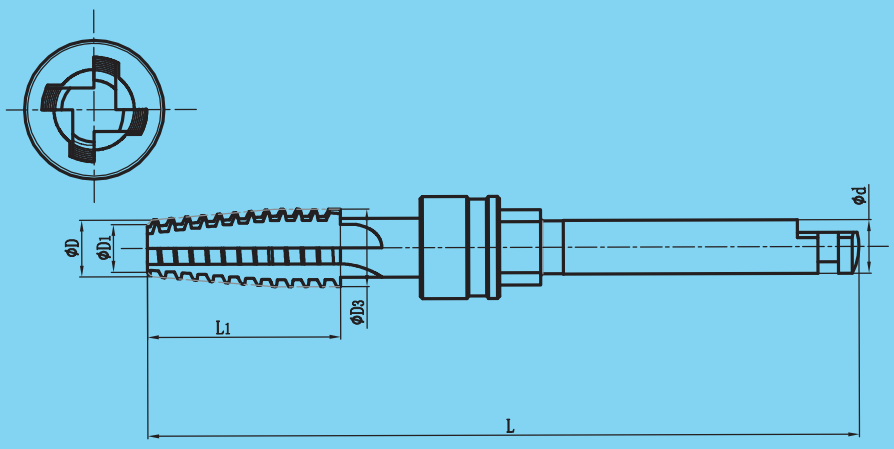

部分尺寸(AA)some size



刃徑ΦD Diameter	2.5	3.3	3.6	4.3
刃長L1 Length of cut	8.5	6.1	6.1	6.1
柄徑Φd Shank Dia.	2.35	2.35	2.35	2.35
總長L Overall length	31.3	28.9	28.9	28.9
刃數Z No. of flute	4	4	4	4

材料:
①超高防銹高耐磨不銹鋼系列(AA)(HRC54° ±2° 斷面)(常備常規)
②一般防銹高耐磨不銹鋼系列(A)(HRC45° ~64° 斷面系列)

Material:
①Super-high anti-rust high wear resistance stainless steel series(AA)(HRC54° ±2° section)(regularly stock)
②General anti-rust high wear resistance stainless steel series(A)(HRC45° ~64° section series)



※必要可帶穿透&不穿透，不同等級加工的中空、空芯内孔加工。
With or without penetration, hollow & hollow core inner hole process with different grades.
必要に応じて、貫通付き&貫通なし、各レベル加工での中空、中空内穴加工。



材料:
①超高防銹高耐磨不銹鋼系列(AA)(HRC54° ±2° 斷面)(常備常規)
②一般防銹高耐磨不銹鋼系列(A)(HRC45° ~64° 斷面系列)

Material:
①Super-high anti-rust high wear resistance stainless steel series(AA)(HRC54° ±2° section)(regularly stock)
②General anti-rust high wear resistance stainless steel series(A)(HRC45° ~64° section series)

部分尺寸(AA):some size (AA)



刃徑 Φd1 Diameter	M3.75	M4.05	M4.25	M4.55
刃長L1 Length of cut 刃の長さ	8	8	8	8
柄徑 Φd Shank Dia.	2.35	2.35	2.35	2.35
總長L Overall length 総長さ	25.5	25.5	25.5	25.5

★、可研磨任意規格，錐度、刃徑;刃長;總長;定位;色圈……及尺寸公差要求。
★、We can grind any specification, taper;flute diameter;flute length; total length;location,color code and size tolerance as per the requirement.

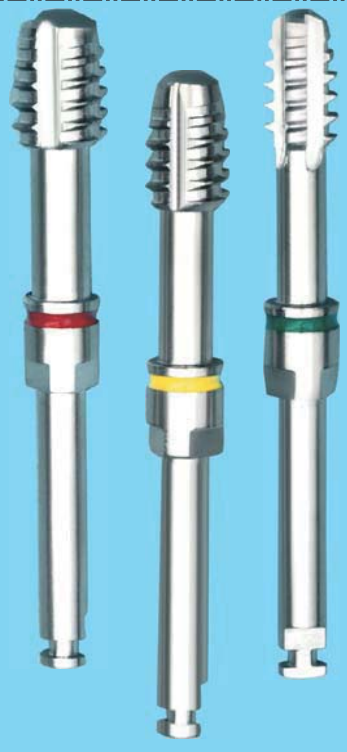

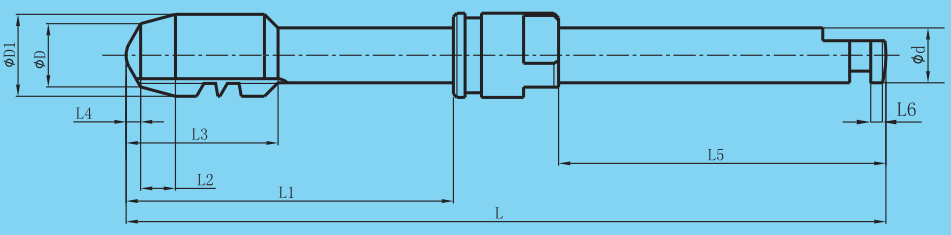

部分尺寸(AA):some size (AA)



刃徑 ΦD1 Diameter	M3.5	M4.1	M4.7
刃長L1 Length of cut 刃の長さ	6.5	6.5	6.5
柄徑 Φd Shank Dia.	2.35	2.35	2.35
總長L Overall length 総長さ	32.5	32.5	32.5

※必要可帶穿透&不穿透，不同等級加工的中空、空芯內孔加工。
With or without penetration, hollow & hollow core inner hole process with different grades.
必要に応じて、貫通付き&貫通なし、各レベル加工での中空、中空内穴加工。

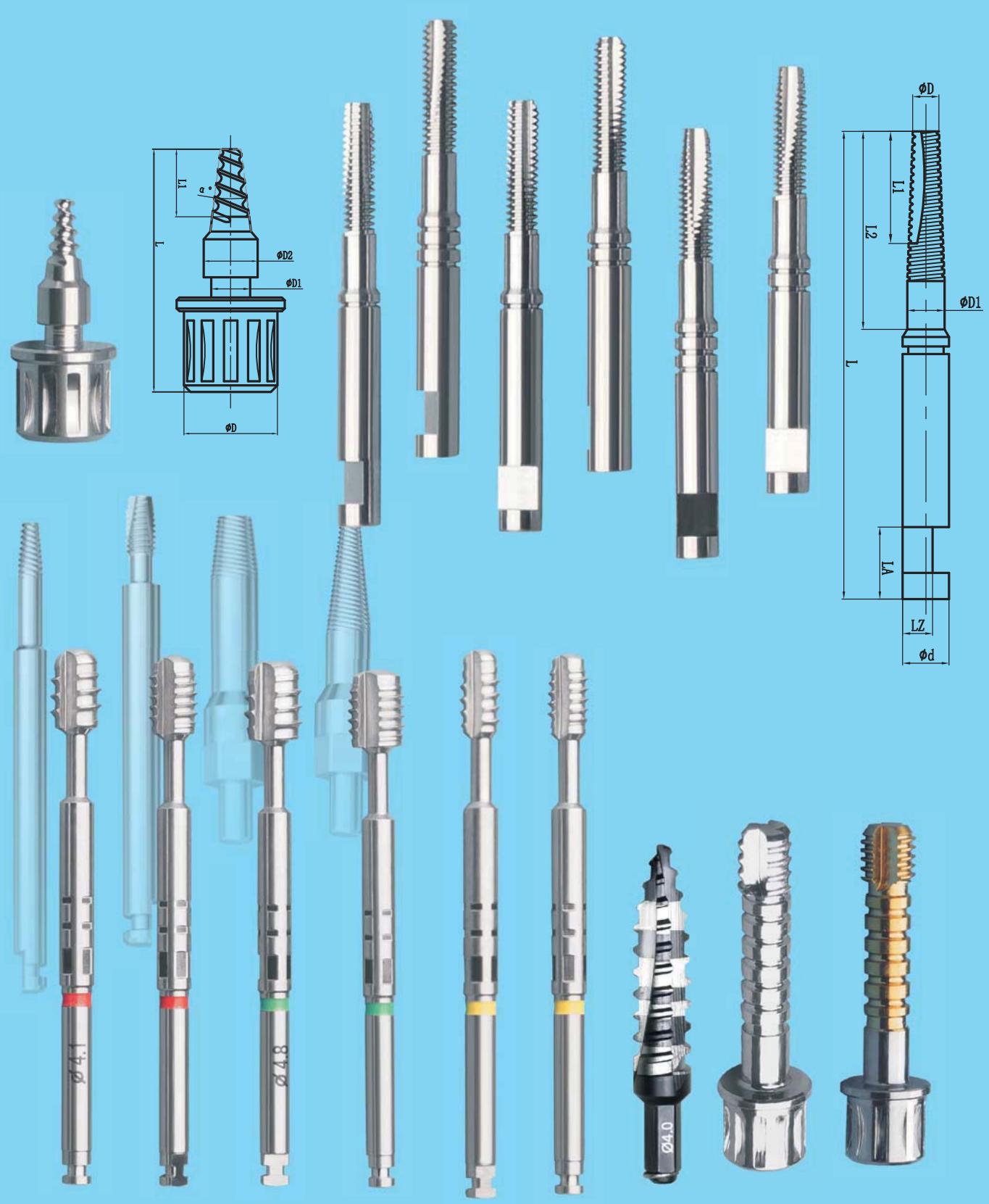

＊必要可帶穿透&不穿透，不同等級加工的中空、空芯内孔加工。
With or without penetration, hollow & hollow core inner hole process with different grades.
必要に応じて、貫通付き&貫通なし、各レベル加工での中空、中空内穴加工。

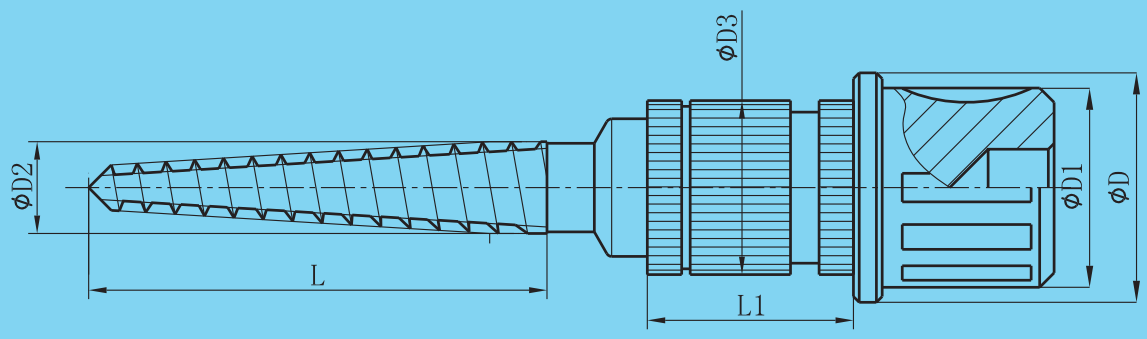

★、任意牙形（螺紋）的熱處理後的超硬、超精研磨（可帶内冷却孔）
★、Super-hard and super finish grinding for any thread form (thread)after heat treament (it can have inner cooling hole)



材料:
①超高防銹高耐磨不銹鋼系列(AA)(HRC54° ±2° 斷面)(常備常規)
②一般防銹高耐磨不銹鋼系列(A)(HRC45° ~64° 斷面系列)

Material:
①Super-high anti-rust high wear resistance stainless steel series(AA)(HRC54° ±2° section)(regularly stock)
②General anti-rust high wear resistance stainless steel series(A)(HRC45° ~64° section series)

部分尺寸some sizes



螺紋徑 φD Diameter	3.2	3.4	3.5	4.0
螺紋長L1 Thread Length	16	16	15.2	16
冒徑 φd Cap Diameter	8.0	8.0	8.0	8.0
總長L Overall length	33.7	34	36.9	34.3





※必要可帶穿透&不穿透，不同等級加工的中空、空芯内孔加工。
With or without penetration, hollow & hollow core inner hole process with different grades.
必要に応じて、貫通付き&貫通なし、各レベル加工での中空、中空内穴加工。



★、可以研磨出不同的刃徑形式、形狀、精研磨成型。
★、We can grind various shank types, shapes and fine grind to mold.

★、可以研磨出不同的柄部形式、形狀、精研磨成型。
★、We can grind various shank types, shapes and fine grind to mold.



★、任意牙形（螺紋）的熱處理後的超硬、超精研磨（可带内冷却孔）。
★、Super-hard and super finish grinding for any thread form(thread)after heat treament (it can have inner cooling hole)

★、微細牙型M0.30~M1.40系列，鑽攻一體之微型絲錐（當然M1.40以上更易于生産）。
★、Micro thread form series M0.30~M1.40, tiny taps for drilling and taping (Of course, series above M1.40 are easier to produce)

※必要可帶穿透&不穿透，不同等級加工的中空、空芯内孔加工。
With or without penetration, hollow & hollow core inner hole process with different grades.
必要に応じて、貫通付き&貫通なし、各レベル加工での中空、中空内穴加工。

★、任意牙形（螺紋）的熱處理後的超硬、超精研磨（可帶内冷却孔）
★、Super-hard and super finish grinding for any thread form (thread) after heat treament (it can have inner cooling hole)

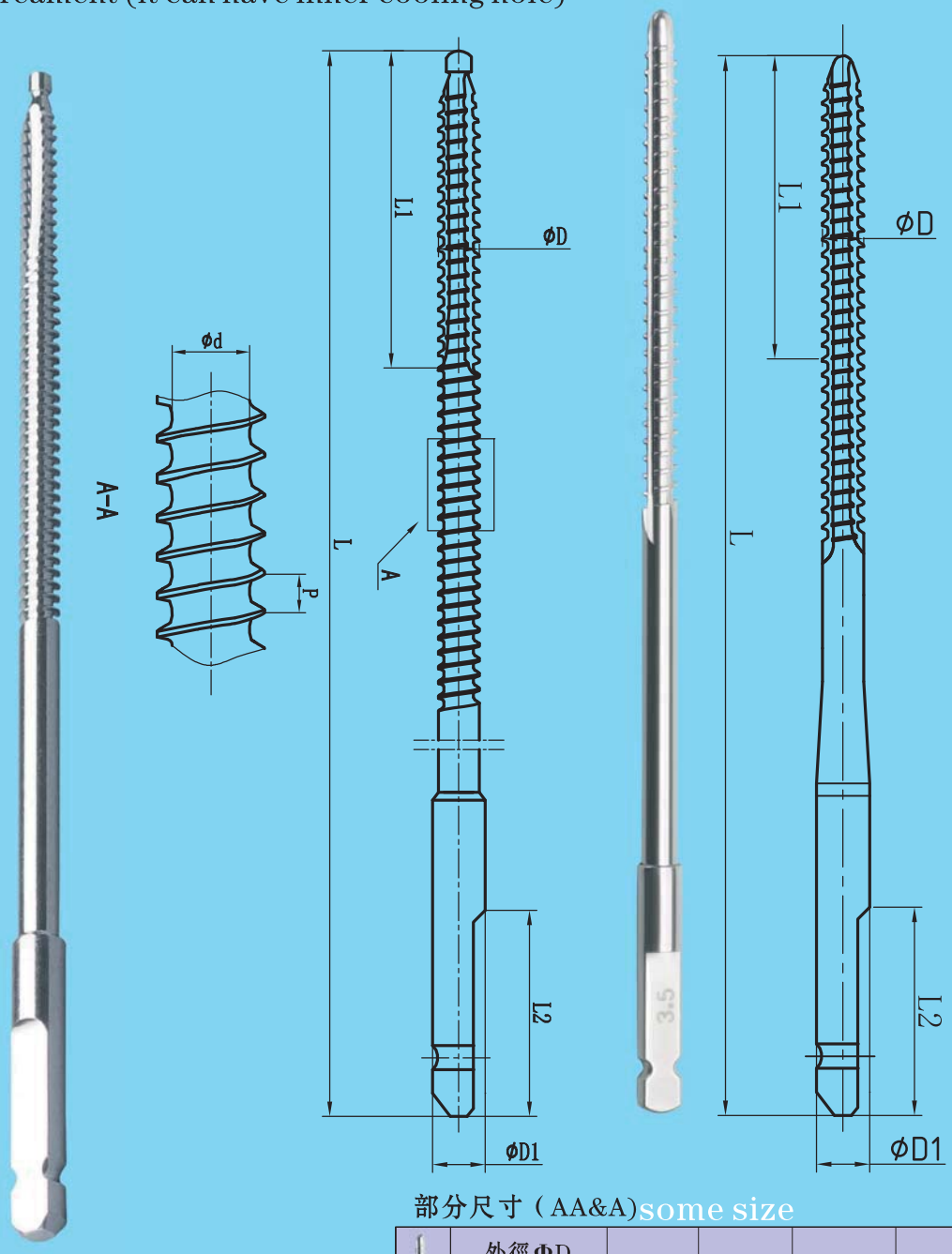

部分尺寸（AA&A）some size

外徑ΦD Diameter	2.0	2.7	3.5	4.3
内徑ΦD1 Diameter	1.6	2.1	2.7	3.5
刃長L1 Length of cut	50	60	70	80
柄徑Φd Shank Dia.	4.5	4.5	4.5	4.5
總長L Overall length	100	110	120	130
刃數Z No. of flute	2	2	3	3

※必要可帶穿透&不穿透，不同等級加工的中空、空芯内孔加工。
With or without penetration, hollow & hollow core inner hole process with different grades.
必要に応じて、貫通付き&貫通なし、各レベル加工での中空、中空内穴加工。

★、任意牙形（螺紋）的熱處理後的超硬、超精研磨（可帶内冷却孔）
★、Super-hard and super finish grinding for any thread form (thread) after heat treament (it can have inner cooling hole)



※必要可帶穿透&不穿透，不同等級加工的中空、空芯内孔加工。
With or without penetration, hollow & hollow core inner hole process with different grades.
必要に応じて、貫通付き&貫通なし、各レベル加工での中空、中空内穴加工。

★、任意牙形（螺紋）的熱處理後的超硬、超精研磨（可帶内冷却孔）
★、Super-hard and super finish grinding for any thread form (thread) after heat treament (it can have inner cooling hole)



※必要可帶穿透&不穿透，不同等級加工的中空、空芯内孔加工。
With or without penetration, hollow & hollow core inner hole process with different grades.
必要に応じて、貫通付き&貫通なし、各レベル加工での中空、中空内穴加工。